Zgradba mikrokrmilnika PIC18FXX20

Študijsko leto 2013/2014

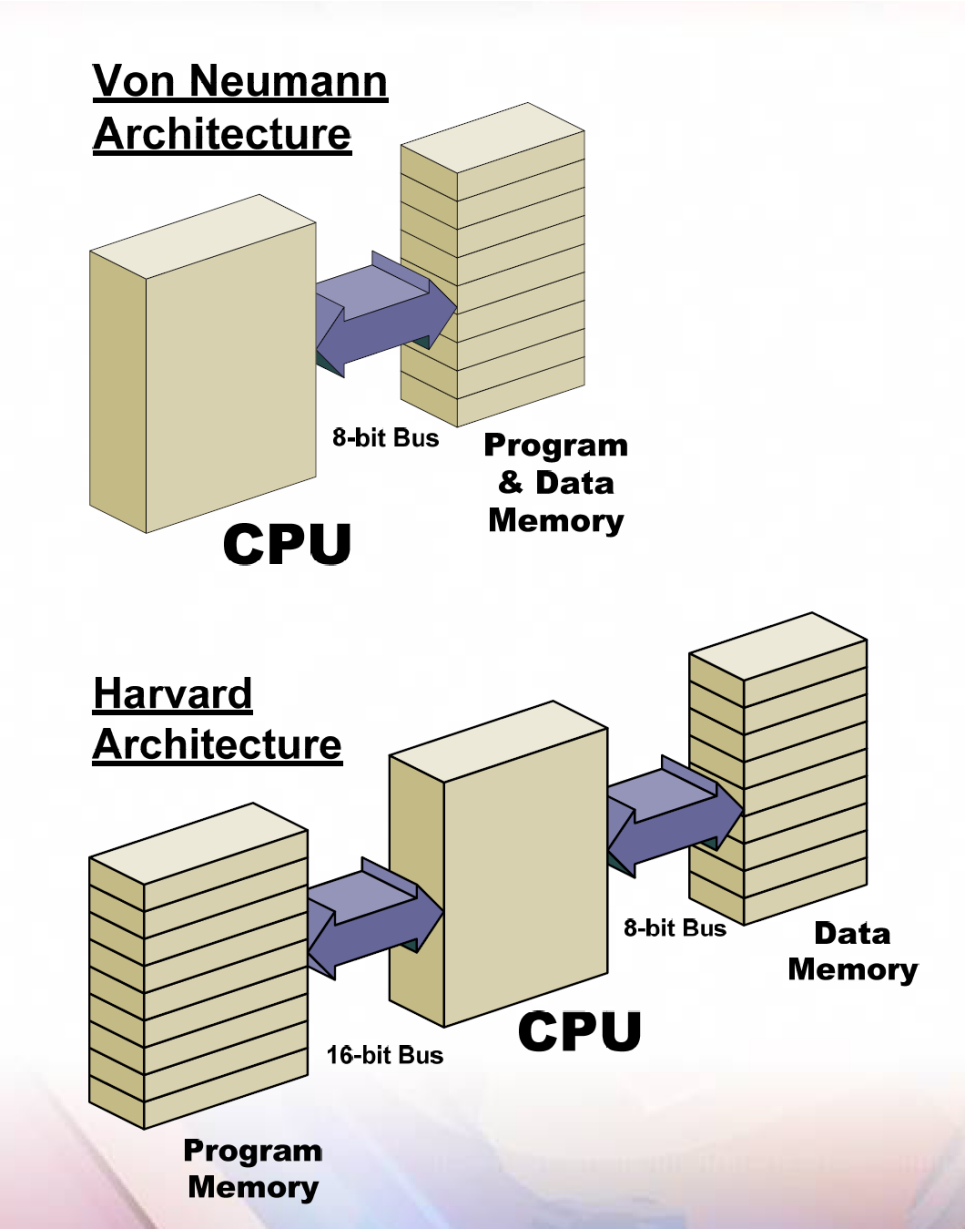

Von Neumannova (Princetonska) arhitektura

- podatki in ukazi so shranjeni v skupnem spominu

Harvardska arhitektura

- podatki in ukazi so v ločenih spominih

- omogoča različne dolžine instrukcijskih in podatkovnih besed

Izvedba ukazov v dveh korakih:

- Zajem instrukcije (fetching instruction)
- Izvedba instrukcije (executing instruction)

Prefetched Instruction

```
movlw 0x05
```

Executing Instruction

```
-
```

Instruction Cycles

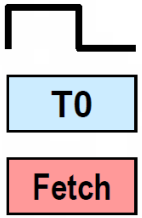

Example Program

```
1   MAIN  movlw   0x05
2         movwf   REG1
3         rcall   SUB1
4         addwf   REG2

51  SUB1  movf    PORTB,w
52        return
53  SUB2  movf    PORTC,w
54        return
```

Prefetched Instruction

```
movwf  REG1
```

Executing Instruction

```
movlw  0x05
```

Instruction Cycles

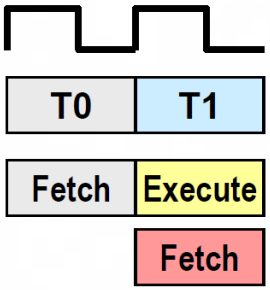

Example Program

```
1   MAIN  movlw   0x05
2         movwf   REG1
3         rcall   SUB1
4         addwf   REG2

51  SUB1  movf    PORTB,w
52        return
53  SUB2  movf    PORTC,w
54        return
```

Prefetched Instruction

```
rcall SUB1
```

Executing Instruction

```
movwf REG1
```

Instruction Cycles

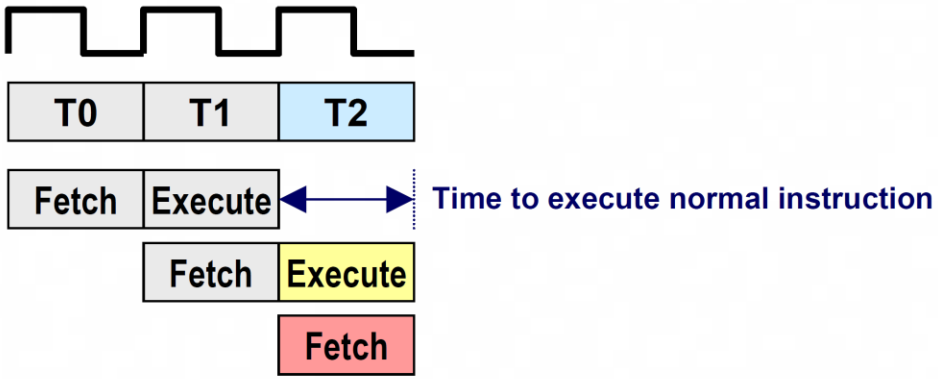

Example Program

```
1   MAIN  movlw   0x05
2         movwf   REG1
3         rcall   SUB1
4         addwf   REG2

51  SUB1  movf    PORTB,w
52        return
53  SUB2  movf    PORTC,w
54        return
```

Prefetched Instruction

```
addwf REG2
```

Executing Instruction

```
rcall SUB1
```

Instruction Cycles

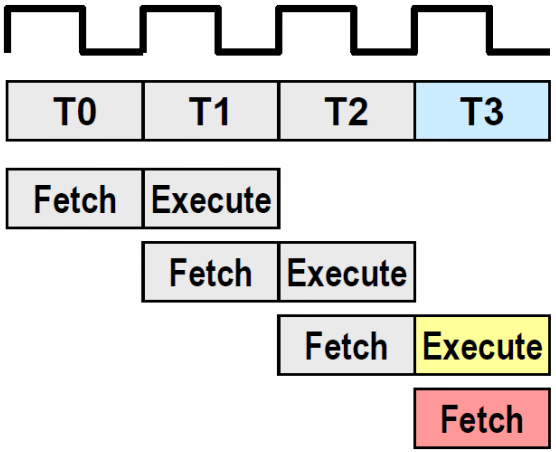

Example Program

```
1   MAIN  movlw   0x05
2         movwf   REG1
3         rcall   SUB1
4         addwf   REG2

51  SUB1  movf    PORTB,w
52        return
53  SUB2  movf    PORTC,w
54        return
```

Prefetched Instruction

```
movf PORTB,w
```

Executing Instruction

```
rcall SUB1
```

Example Program

```
1   MAIN  movlw   0x05
2         movwf   REG1
3         rcall   SUB1
4         addwf   REG2

51  SUB1  movf    PORTB,w
52        return
53  SUB2  movf    PORTC,w
54        return
```

Instruction Cycles

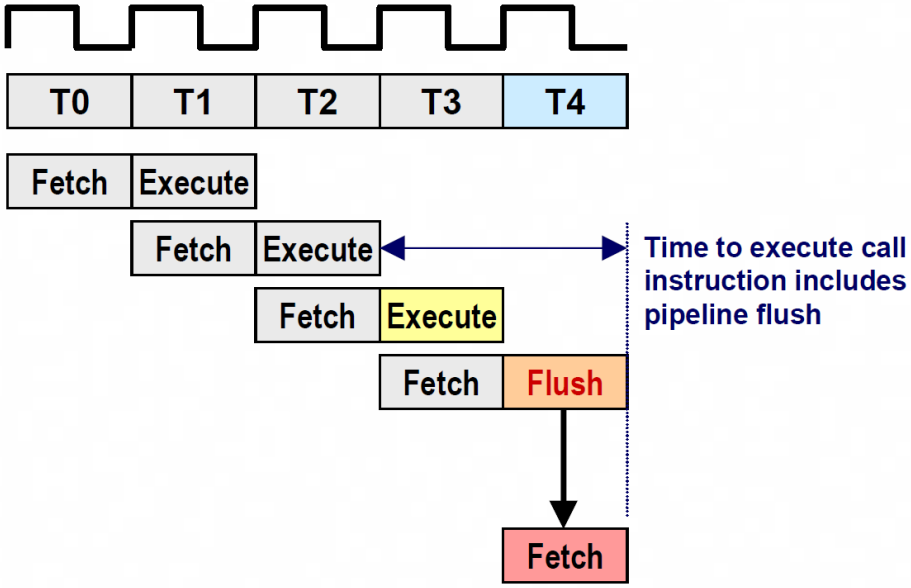

Prefetched Instruction

```
return
```

Executing Instruction

```
movf PORTB,w
```

Instruction Cycles

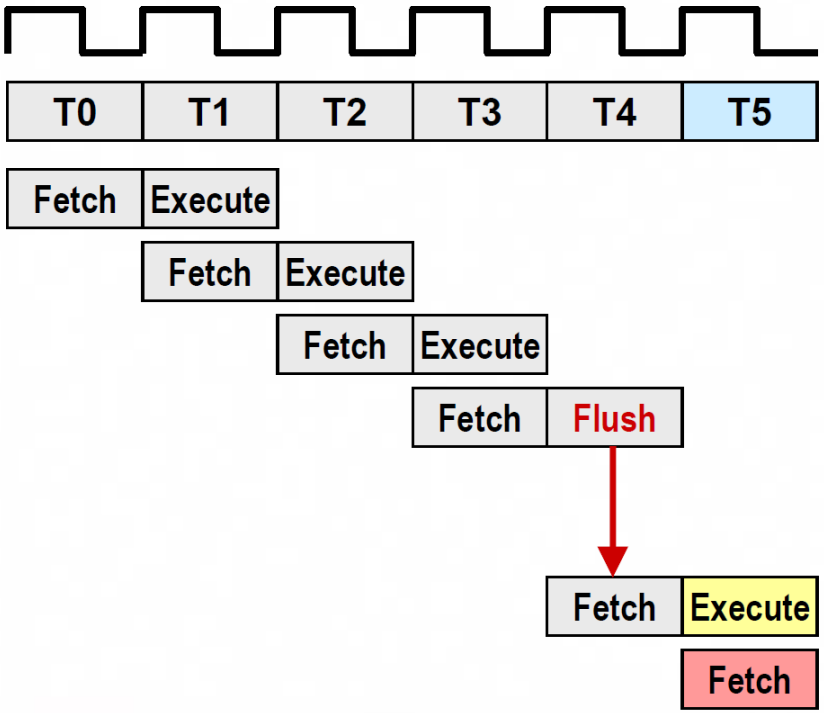

Example Program

```
1   MAIN  movlw   0x05
2         movwf   REG1
3         rcall   SUB1
4         addwf   REG2

51  SUB1  movf    PORTB,w
52        return
53  SUB2  movf    PORTC,w
54        return
```

Prefetched Instruction

```
movf  PORTC,w
```

Executing Instruction

```
return
```

Instruction Cycles

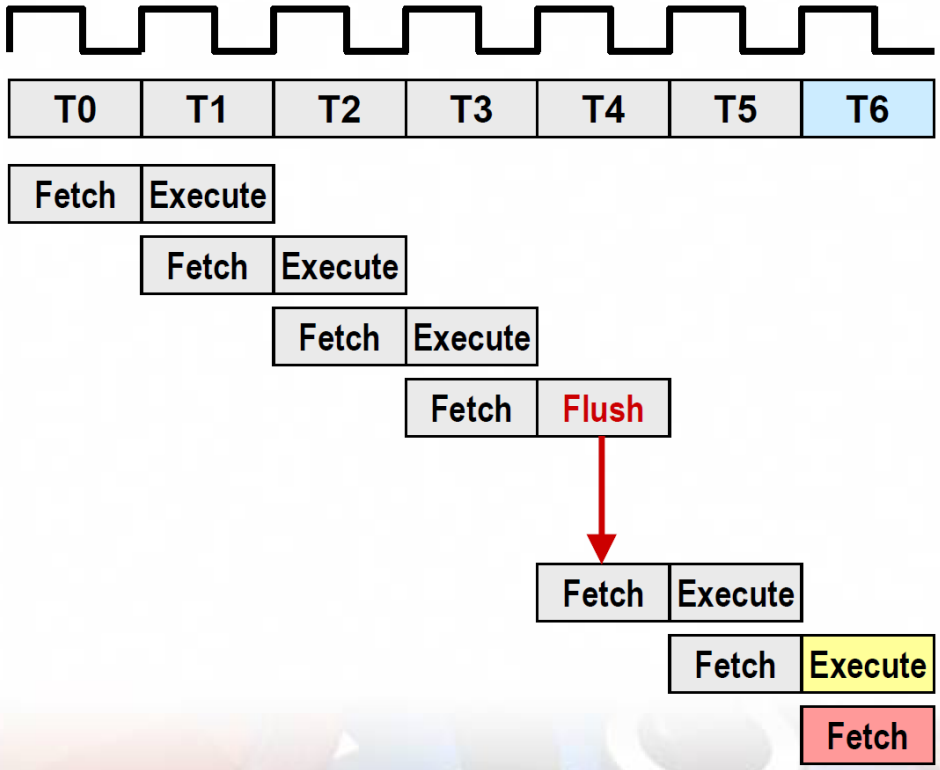

Example Program

```
1   MAIN  movlw   0x05
2         movwf   REG1
3         rcall   SUB1
4         addwf   REG2

51  SUB1  movf    PORTB,w
52        return
53  SUB2  movf    PORTC,w
54        return
```

Prefetched Instruction

```
addwf REG2
```

Executing Instruction

```
return
```

Instruction Cycles

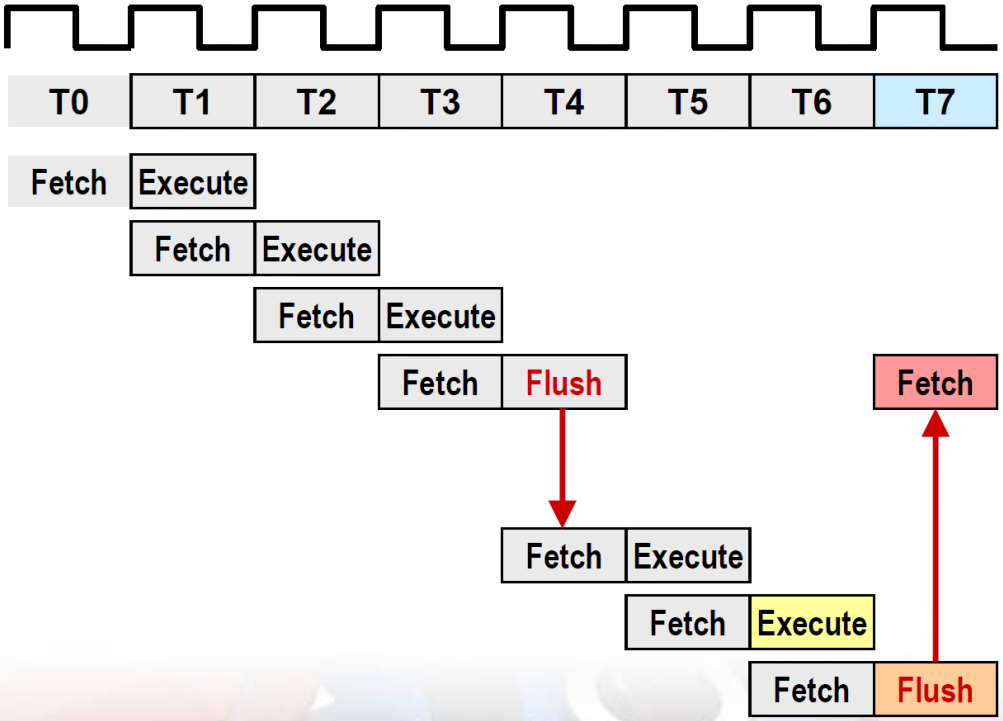

Example Program

```
1   MAIN  movlw   0x05
2         movwf   REG1
3         rcall   SUB1
4         addwf   REG2

51  SUB1  movf    PORTB,w
52        return
53  SUB2  movf    PORTC,w
54        return
```

Long Word Instruction

8-bit Program Memory

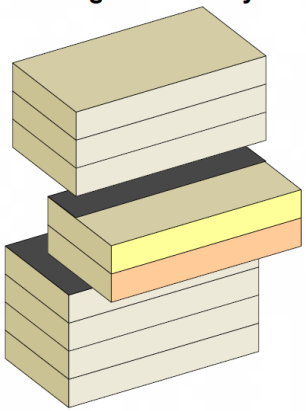

16-bit Program Memory

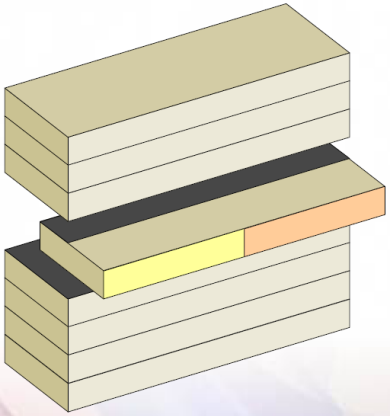

8-bit Instruction on Typical 8-bit MCU

Example: Freescale 'Load Accumulator A':
- 2 Program Memory Locations
- 2 Instruction Cycles to Execute

```
ldaa  #k
```

1	0	0	0	0	1	1	0
k	k	k	k	k	k	k	k

- Limits Bandwidth
- Increases Memory Size Requirements

16-bit Instruction on PIC18 8-bit MCU

Example: 'Move Literal to Working Register'
- 1 Program Memory Location
- 1 Instruction Cycle to Execute

```
movlw  k
```

0	0	0	0	1	1	1	0	k	k	k	k	k	k	k	k

- Separate busses allow different widths
- 2k x 16 is roughly equivalent to 4k x 8

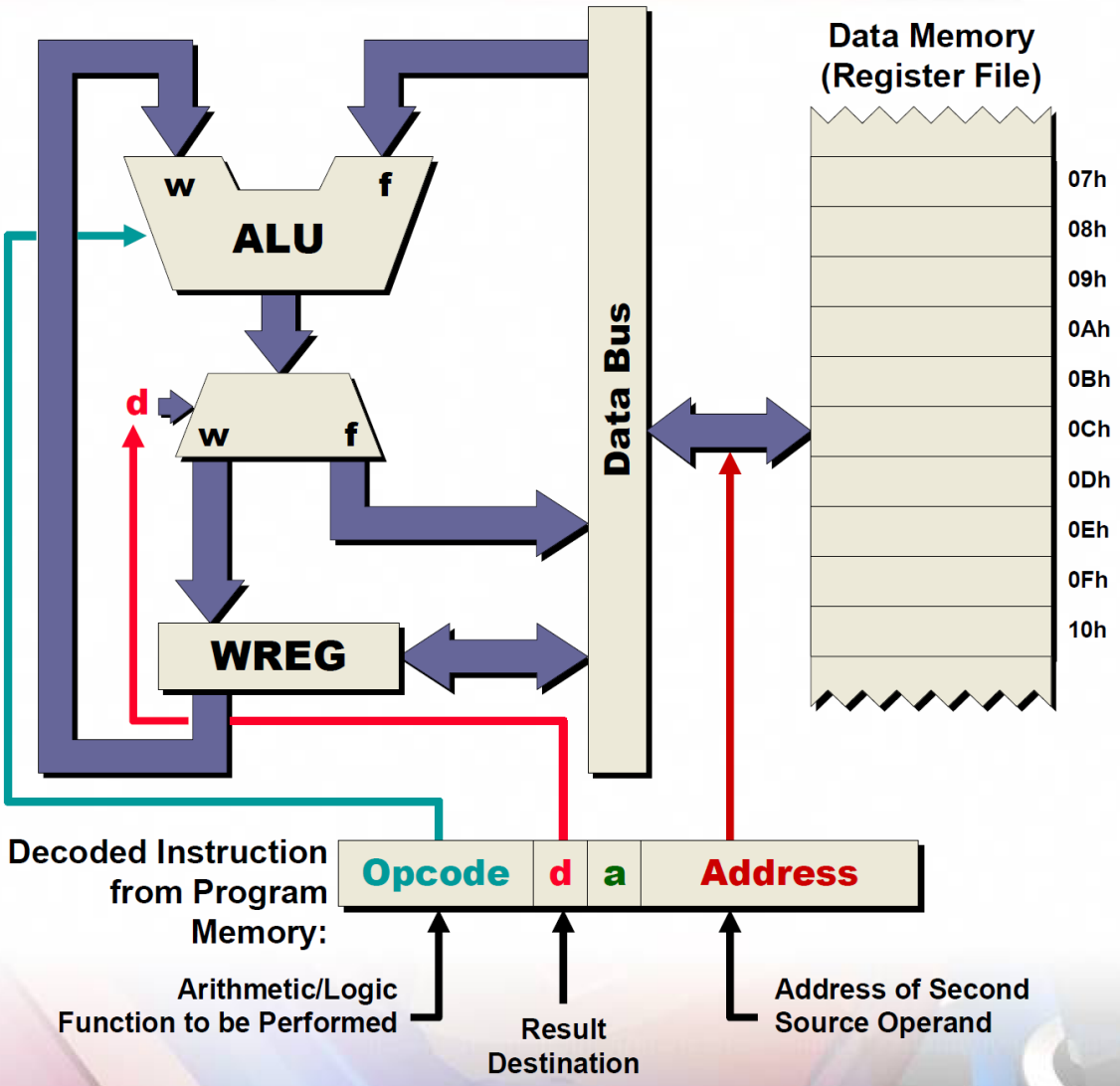

- **Register File Concept**: All of data memory is part of the register file, so any location in data memory may be operated on directly
- All peripherals are mapped into data memory as a series of registers
- **Orthogonal Instruction Set**: ALL instructions can operate on ANY data memory location
- The Long Word Instruction format allows a directly addressable register file

Byte Oriented Operations		
addwf	f,d,a	Add WREG and f
addwfc	f,d,a	Add WREG and Carry bit to f
andwf	f,d,a	AND WREG with f
clrf	f,a	Clear f
comf	f,d,a	Complement f
cpfseq	f,a	Compare f with WREG, skip =
cpfsgt	f,a	Compare f with WREG, skip >
cpfslt	f,a	Compare f with WREG, skip <
decf	f,d,a	Decrement f
decfsz	f,d,a	Decrement f, Skip if 0
dcfsnz	f,d,a	Decrement f, Skip if Not 0
incf	f,d,a	Increment f
incfsz	f,d,a	Increment f, Skip if 0
infsnz	f,d,a	Increment f, Skip if Not 0
iorwf	f,d,a	Inclusive OR WREG with f
movf	f,d,a	Move f
movff	f_s,f_d	Move f_s (src) to f_d (dst)
movwf	f,a	Move WREG to f
mulwf	f,a	Multiply WREG with f
negf	f,a	Negate f
rlcf	f,d,a	Rotate Left f through Carry
rlncf	f,d,a	Rotate Left f (No Carry)
rrcf	f,d,a	Rotate Right f through Carry
rrncf	f,d,a	Rotate Right f (No Carry)
setf	f,a	Set f
subfwb	f,d,a	Subtract f from WREG with borrow
subwf	f,d,a	Subtract WREG from f
subwfb	f,d,a	Subtract WREG from f with borrow
swapf	f,d,a	Swap nibbles in f
tstfsz	f,a	Test f, skip if 0
xorwf	f,d,a	Exclusive OR WREG with f

Bit Oriented Operations		
bcf	f,b,a	Bit Clear f
bsf	f,b,a	Bit Set f
btfsc	f,b,a	Bit Test f, Skip if Clear
btfss	f,b,a	Bit Test f, Skip if Set
btg	f,b,a	Bit Toggle f

Control Operations		
bc	n	Branch if Carry
bn	n	Branch if Negative
bnc	n	Branch if Not Carry
bnn	n	Branch if Not Negative
bnov	n	Branch if Not Overflow
bnz	n	Branch if Not Zero
bov	n	Branch if Overflow
bra	n	Branch Always
bz	n	Branch if Zero
call	n,s	Call subroutine
clrwdt		Clear Watchdog Timer
daw		Decimal Adjust WREG
goto	n	Go to address
nop		No Operation
pop		Pop top of return stack (TOS)
push		Push top of return stack (TOS)
rcall	n	Relative Call
reset		Software device RESET
retfie	s	Return from interrupt
return	s	Return from subroutine
sleep		Go into standby mode

Literal Operations		
addlw	k	Add literal and WREG
andlw	k	AND literal with WREG
iorlw	k	Inclusive OR literal with WREG
lfsr	f,k	Move 12-bit literal to FSR
movlb	k	Move literal to BSR<3:0>
movlw	k	Move literal to WREG
mullw	k	Multiply literal with WREG
retlw	k	Return with literal in WREG
sublw	k	Subtract WREG from literal
xorlw	k	Exclusive OR literal with WREG

Data Memory ⇔ Program Memory Operations	
tblrd*	Table Read
tblrd*+	Table Read with post-increment
tblrd*-	Table Read with post-decrement
tblrd+*	Table Read with pre-increment
tblwt*	Table Write
tblwt*+	Table Write with post-increment
tblwt*-	Table Write with post-decrement
tblwt+*	Table Write with pre-increment

Byte Oriented Operations

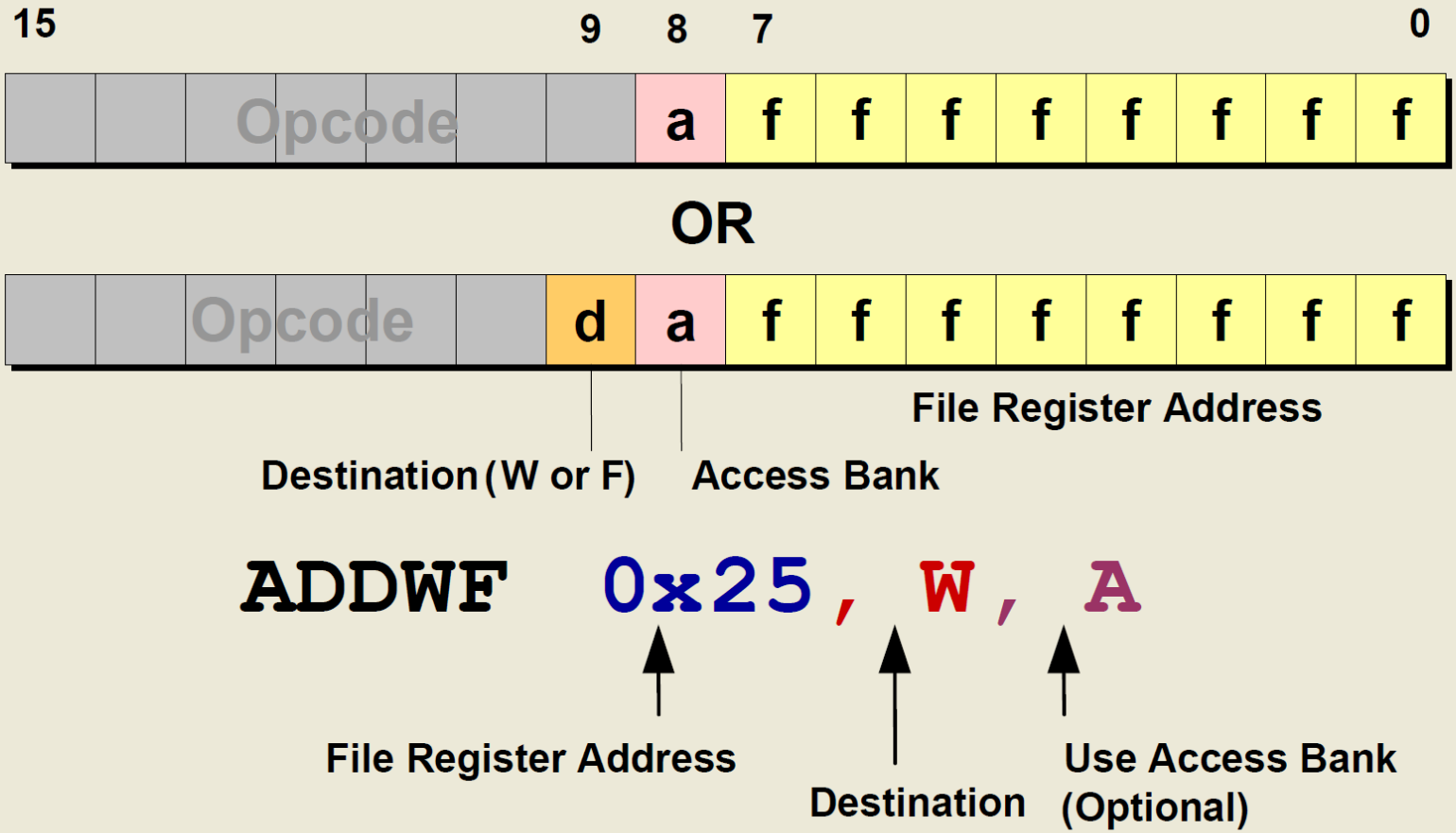


```
ADDWF   0x25, W, A
```

File Register Address

Destination

Use Access Bank (Optional)

Bit Oriented Operations

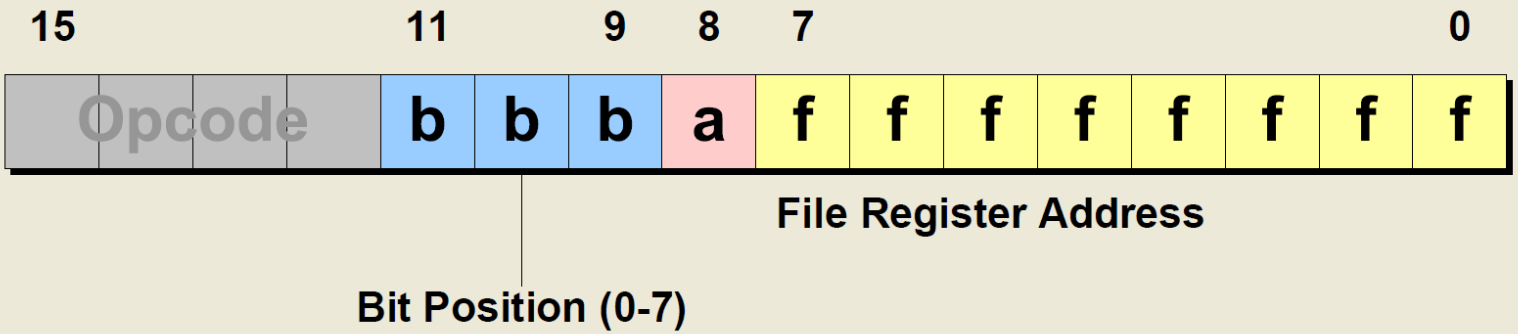


```
BSF  0x25, 3, A
```

File Register Address

Bit Position

Access Bank (Optional)

Literal and Control Operations

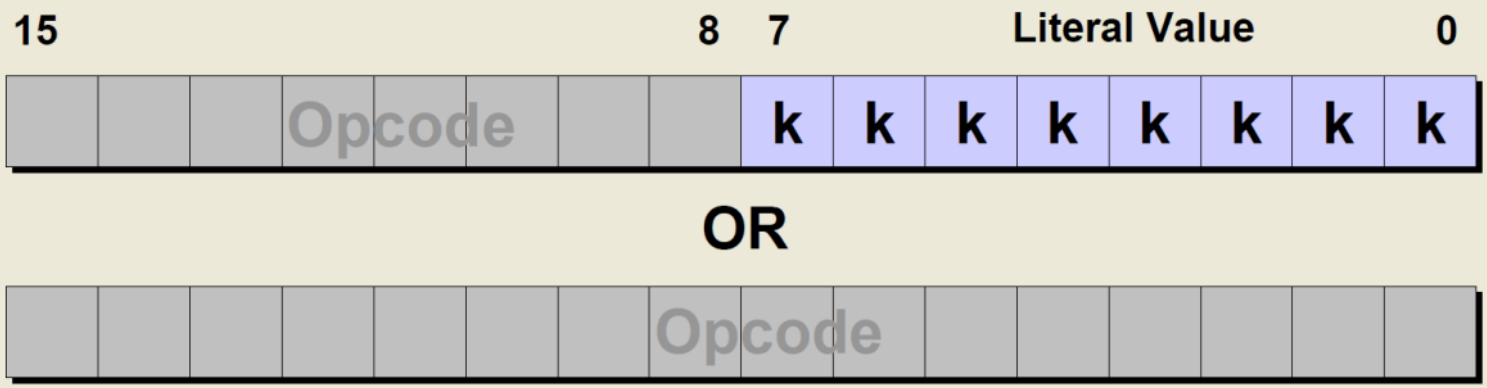


```
MOVLW   0x25
```

Literal Value

Byte to Byte Move Operations (2 Words)

15			12	11											0
	Opcode			f_s	f_s	f_s	f_s	f_s	f_s	f_s	f_s	f_s	f_s	f_s	f_s
	Opcode			f_d	f_d	f_d	f_d	f_d	f_d	f_d	f_d	f_d	f_d	f_d	f_d

Source Register Address

Destination Register Address

```
MOVFF   0x125, 0x140
```

Source Address

Destination Address

Call and Goto Operations (2 Words)

15				11			8	7							0
			Opcode					n_8	n_7	n_6	n_5	n_4	n_3	n_2	n_1
	Opcode			n_{20}	n_{19}	n_{18}	n_{17}	n_{16}	n_{15}	n_{14}	n_{13}	n_{12}	n_{11}	n_{10}	n_9

```
CALL    0x1125
```

Subroutine Address

Interpreter:

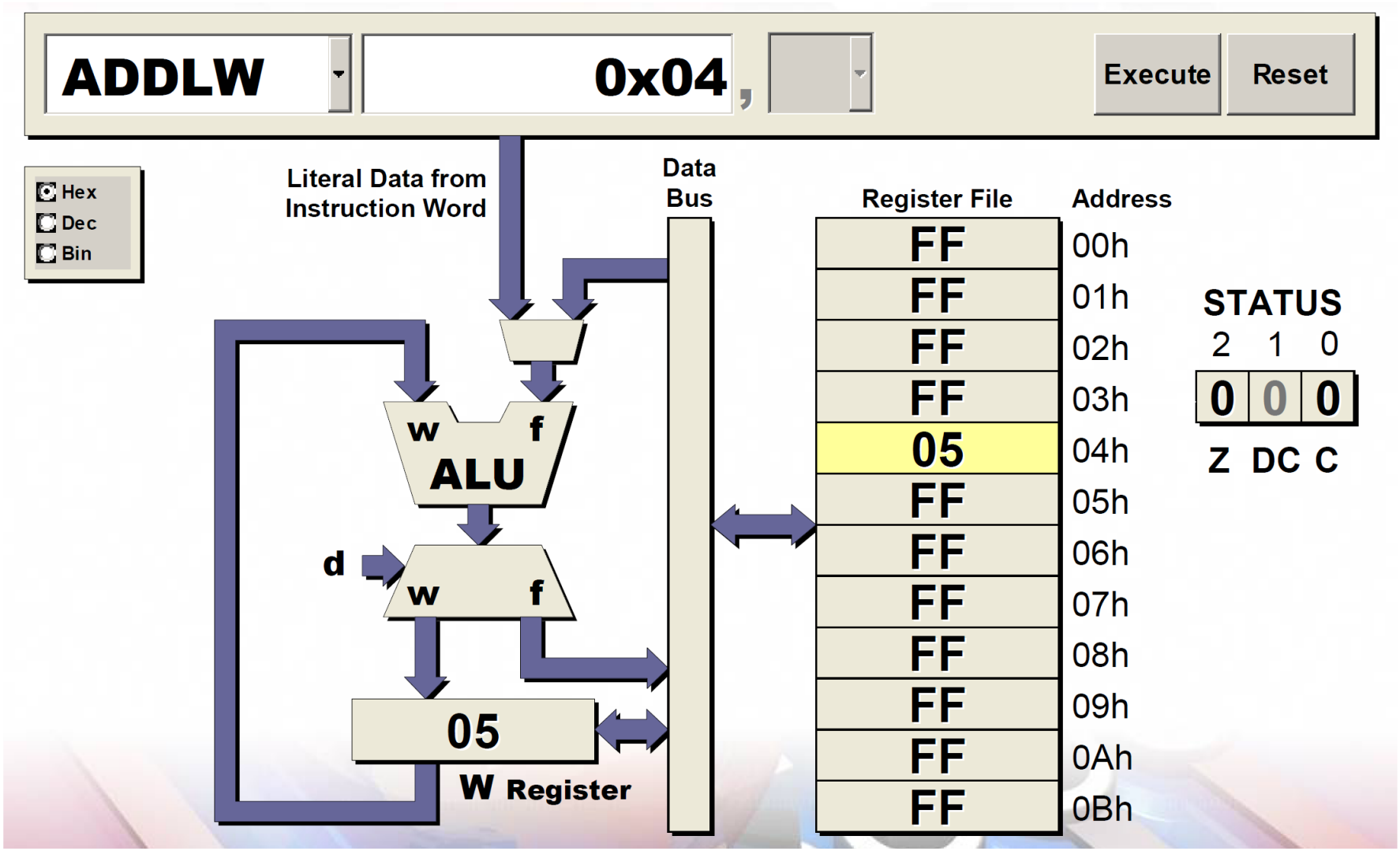

Data Memory Organization

- Data Memory up to 4 Kbytes
- Divided into 256 byte banks
- Half of bank 0 and half of bank 15 form a virtual bank that is accessible no matter which bank is selected

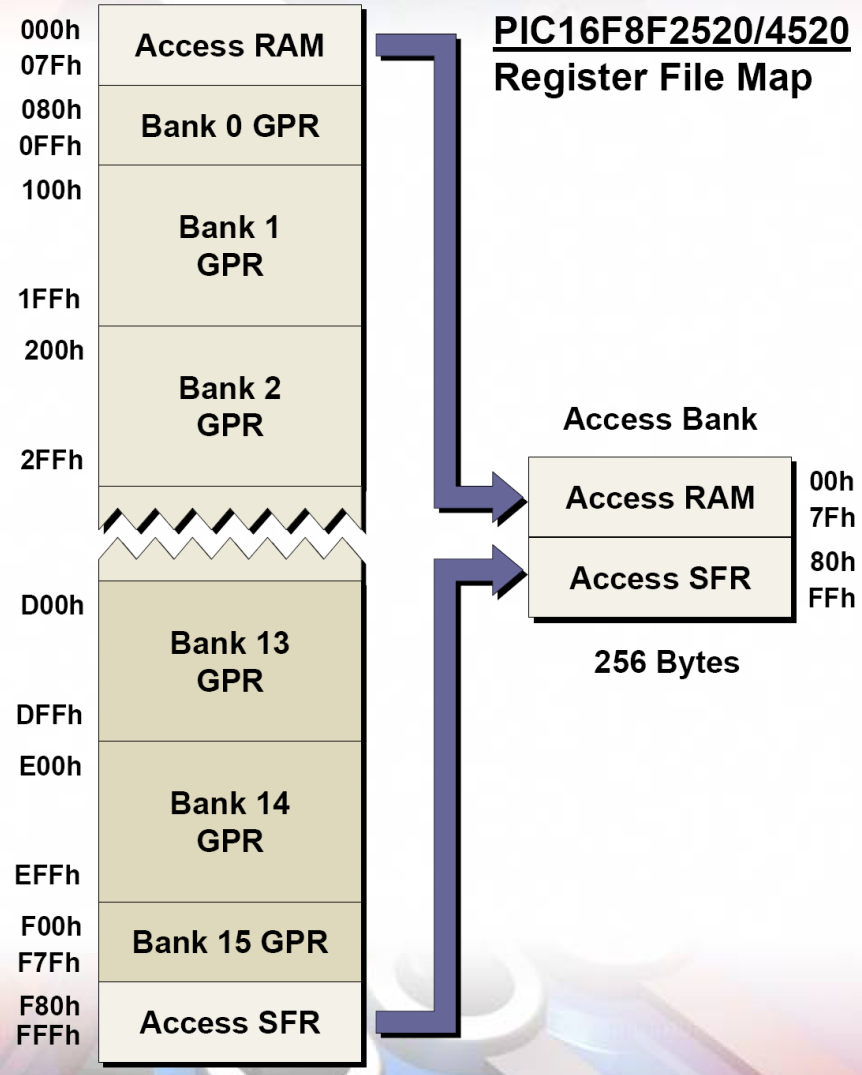

SFR registri

Address	Name	Address	Name	Address	Name	Address	Name
FFFh	TOSU	FDFh	INDF2(3)	FBFh	CCPR1H	F9Fh	IPR1
FFEh	TOSH	FDEh	POSTINC2(3)	FBEh	CCPR1L	F9Eh	PIR1
FFDh	TOSL	FDDh	POSTDEC2(3)	FBDh	CCP1CON	F9Dh	PIE1
FFCh	STKPTR	FDCh	PREINC2(3)	FBCh	CCPR2H	F9Ch	—
FFBh	PCLATU	FDBh	PLUSW2(3)	FBBh	CCPR2L	F9Bh	—
FFAh	PCLATH	FDAh	FSR2H	FBAh	CCP2CON	F9Ah	—
FF9h	PCL	FD9h	FSR2L	FB9h	—	F99h	—
FF8h	TBLPTRU	FD8h	STATUS	FB8h	—	F98h	—
FF7h	TBLPTRH	FD7h	TMR0H	FB7h	—	F97h	—
FF6h	TBLPTRL	FD6h	TMR0L	FB6h	—	F96h	TRISE(2)
FF5h	TABLAT	FD5h	T0CON	FB5h	—	F95h	TRISD(2)
FF4h	PRODH	FD4h	—	FB4h	—	F94h	TRISC
FF3h	PRODL	FD3h	OSCCON	FB3h	TMR3H	F93h	TRISB
FF2h	INTCON	FD2h	LVDCON	FB2h	TMR3L	F92h	TRISA
FF1h	INTCON2	FD1h	WDTCON	FB1h	T3CON	F91h	—
FF0h	INTCON3	FD0h	RCON	FB0h	—	F90h	—
FEFh	INDF0(3)	FCFh	TMR1H	FAFh	SPBRG	F8Fh	—
FEEh	POSTINC0(3)	FCEh	TMR1L	FAEh	RCREG	F8Eh	—
FEDh	POSTDEC0(3)	FCDh	T1CON	FADh	TXREG	F8Dh	LATE(2)
FECh	PREINC0(3)	FCCh	TMR2	FACh	TXSTA	F8Ch	LATD(2)
FEBh	PLUSW0(3)	FCBh	PR2	FABh	RCSTA	F8Bh	LATC
FEAh	FSR0H	FCAh	T2CON	FAAh	—	F8Ah	LATB
FE9h	FSR0L	FC9h	SSPBUF	FA9h	EEADR	F89h	LATA
FE8h	WREG	FC8h	SSPADD	FA8h	EEDATA	F88h	—
FE7h	INDF1(3)	FC7h	SSPSTAT	FA7h	EECON2	F87h	—
FE6h	POSTINC1(3)	FC6h	SSPCON1	FA6h	EECON1	F86h	—
FE5h	POSTDEC1(3)	FC5h	SSPCON2	FA5h	—	F85h	—
FE4h	PREINC1(3)	FC4h	ADRESH	FA4h	—	F84h	PORTE(2)
FE3h	PLUSW1(3)	FC3h	ADRESL	FA3h	—	F83h	PORTD(2)
FE2h	FSR1H	FC2h	ADCON0	FA2h	IPR2	F82h	PORTC
FE1h	FSR1L	FC1h	ADCON1	FA1h	PIR2	F81h	PORTB
FE0h	BSR	FC0h	—	FA0h	PIE2	F80h	PORTA

Note 1: Unimplemented registers are read as '0'.
2: This register is not available on PIC18F2X2 devices.
3: This is not a physical register.

File Name	Bit 7	Bit 6	Bit 5	Bit 4	Bit 3	Bit 2	Bit 1	Bit 0	Value on POR, BOR	Details on page:
TOSU	—	—	—	Top-of-Stack upper Byte (TOS<20:16>)					---0 0000	37
TOSH	Top-of-Stack High Byte (TOS<15:8>)								0000 0000	37
TOSL	Top-of-Stack Low Byte (TOS<7:0>)								0000 0000	37
STKPTR	STKFUL	STKUNF	—	Return Stack Pointer					00-0 0000	38
PCLATU	—	—	—	Holding Register for PC<20:16>					---0 0000	39
PCLATH	Holding Register for PC<15:8>								0000 0000	39
PCL	PC Low Byte (PC<7:0>)								0000 0000	39
TBLPTRU	—	—	bit21[2]	Program Memory Table Pointer Upper Byte (TBLPTR<20:16>)					--00 0000	58
TBLPTRH	Program Memory Table Pointer High Byte (TBLPTR<15:8>)								0000 0000	58
TBLPTRL	Program Memory Table Pointer Low Byte (TBLPTR<7:0>)								0000 0000	58
TABLAT	Program Memory Table Latch								0000 0000	58
PRODH	Product Register High Byte								xxxx xxxx	71
PRODL	Product Register Low Byte								xxxx xxxx	71
INTCON	GIE/GIEH	PEIE/GIEL	TMR0IE	INT0IE	RBIE	TMR0IF	INT0IF	RBIF	0000 000x	75
INTCON2	RBPU	INTEDG0	INTEDG1	INTEDG2	—	TMR0IP	—	RBIP	1111 -1-1	76
INTCON3	INT2IP	INT1IP	—	INT2IE	INT1IE	—	INT2IF	INT1IF	11-0 0-00	77
INDF0	Uses contents of FSR0 to address data memory - value of FSR0 not changed (not a physical register)								n/a	50
POSTINC0	Uses contents of FSR0 to address data memory - value of FSR0 post-incremented (not a physical register)								n/a	50
POSTDEC0	Uses contents of FSR0 to address data memory - value of FSR0 post-decremented (not a physical register)								n/a	50
PREINC0	Uses contents of FSR0 to address data memory - value of FSR0 pre-incremented (not a physical register)								n/a	50
PLUSW0	Uses contents of FSR0 to address data memory - value of FSR0 (not a physical register). Offset by value in WREG.								n/a	50
FSR0H	—	—	—	—	Indirect Data Memory Address Pointer 0 High Byte				---- 0000	50
FSR0L	Indirect Data Memory Address Pointer 0 Low Byte								xxxx xxxx	50
WREG	Working Register								xxxx xxxx	n/a
INDF1	Uses contents of FSR1 to address data memory - value of FSR1 not changed (not a physical register)								n/a	50
POSTINC1	Uses contents of FSR1 to address data memory - value of FSR1 post-incremented (not a physical register)								n/a	50
POSTDEC1	Uses contents of FSR1 to address data memory - value of FSR1 post-decremented (not a physical register)								n/a	50
PREINC1	Uses contents of FSR1 to address data memory - value of FSR1 pre-incremented (not a physical register)								n/a	50
PLUSW1	Uses contents of FSR1 to address data memory - value of FSR1 (not a physical register). Offset by value in WREG.								n/a	50
FSR1H	—	—	—	—	Indirect Data Memory Address Pointer 1 High Byte				---- 0000	50
FSR1L	Indirect Data Memory Address Pointer 1 Low Byte								xxxx xxxx	50
BSR	—	—	—	—	Bank Select Register				---- 0000	49
INDF2	Uses contents of FSR2 to address data memory - value of FSR2 not changed (not a physical register)								n/a	50
POSTINC2	Uses contents of FSR2 to address data memory - value of FSR2 post-incremented (not a physical register)								n/a	50
POSTDEC2	Uses contents of FSR2 to address data memory - value of FSR2 post-decremented (not a physical register)								n/a	50
PREINC2	Uses contents of FSR2 to address data memory - value of FSR2 pre-incremented (not a physical register)								n/a	50
PLUSW2	Uses contents of FSR2 to address data memory - value of FSR2 (not a physical register). Offset by value in WREG.								n/a	50
FSR2H	—	—	—	—	Indirect Data Memory Address Pointer 2 High Byte				---- 0000	50
FSR2L	Indirect Data Memory Address Pointer 2 Low Byte								xxxx xxxx	50
STATUS	—	—	—	N	OV	Z	DC	C	---x xxxx	52
TMR0H	Timer0 Register High Byte								0000 0000	105
TMR0L	Timer0 Register Low Byte								xxxx xxxx	105
T0CON	TMR0ON	T08BIT	T0CS	T0SE	PSA	T0PS2	T0PS1	T0PS0	1111 1111	103

Legend: x = unknown, u = unchanged, - = unimplemented, q = value depends on condition

Note 1: RA6 and associated bits are configured as port pins in RCIO and ECIO Oscillator mode only and read '0' in all other Oscillator modes.

2: Bit 21 of the TBLPTRU allows access to the device configuration bits.

3: These registers and bits are reserved on the PIC18F2X2 devices; always maintain these clear.

File Name	Bit 7	Bit 6	Bit 5	Bit 4	Bit 3	Bit 2	Bit 1	Bit 0	Value on POR, BOR	Details on page:
OSCCON	—	—	—	—	—	—	—	SCS	---- ---0	21
LVDCON	—	—	IRVST	LVDEN	LVDL3	LVDL2	LVDL1	LVDL0	--00 0101	191
WDTCON	—	—	—	—	—	—	—	SWDTE	---- ---0	203
RCON	IPEN	—	—	$\overline{RI}$	$\overline{TO}$	$\overline{PD}$	$\overline{POR}$	$\overline{BOR}$	0--1 11qq	53, 28, 84
TMR1H	Timer1 Register High Byte								xxxx xxxx	107
TMR1L	Timer1 Register Low Byte								xxxx xxxx	107
T1CON	RD16	—	T1CKPS1	T1CKPS0	T1OSCEN	$\overline{T1SYNC}$	TMR1CS	TMR1ON	0-00 0000	107
TMR2	Timer2 Register								0000 0000	111
PR2	Timer2 Period Register								1111 1111	112
T2CON	—	TOUTPS3	TOUTPS2	TOUTPS1	TOUTPS0	TMR2ON	T2CKPS1	T2CKPS0	-000 0000	111
SSPBUF	SSP Receive Buffer/Transmit Register								xxxx xxxx	125
SSPADD	SSP Address Register in I^2C Slave mode. SSP Baud Rate Reload Register in I^2C Master mode.								0000 0000	134
SSPSTAT	SMP	CKE	D/$\overline{A}$	P	S	R/$\overline{W}$	UA	BF	0000 0000	126
SSPCON1	WCOL	SSPOV	SSPEN	CKP	SSPM3	SSPM2	SSPM1	SSPM0	0000 0000	127
SSPCON2	GCEN	ACKSTAT	ACKDT	ACKEN	RCEN	PEN	RSEN	SEN	0000 0000	137
ADRESH	A/D Result Register High Byte								xxxx xxxx	187,188
ADRESL	A/D Result Register Low Byte								xxxx xxxx	187,188
ADCON0	ADCS1	ADCS0	CHS2	CHS1	CHS0	GO/$\overline{DONE}$	—	ADON	0000 00-0	181
ADCON1	ADFM	ADCS2	—	—	PCFG3	PCFG2	PCFG1	PCFG0	00-- 0000	182
CCPR1H	Capture/Compare/PWM Register1 High Byte								xxxx xxxx	121, 123
CCPR1L	Capture/Compare/PWM Register1 Low Byte								xxxx xxxx	121, 123
CCP1CON	—	—	DC1B1	DC1B0	CCP1M3	CCP1M2	CCP1M1	CCP1M0	--00 0000	117
CCPR2H	Capture/Compare/PWM Register2 High Byte								xxxx xxxx	121, 123
CCPR2L	Capture/Compare/PWM Register2 Low Byte								xxxx xxxx	121, 123
CCP2CON	—	—	DC2B1	DC2B0	CCP2M3	CCP2M2	CCP2M1	CCP2M0	--00 0000	117
TMR3H	Timer3 Register High Byte								xxxx xxxx	113
TMR3L	Timer3 Register Low Byte								xxxx xxxx	113
T3CON	RD16	T3CCP2	T3CKPS1	T3CKPS0	T3CCP1	$\overline{T3SYNC}$	TMR3CS	TMR3ON	0000 0000	113
SPBRG	USART1 Baud Rate Generator								0000 0000	168
RCREG	USART1 Receive Register								0000 0000	175, 178, 180
TXREG	USART1 Transmit Register								0000 0000	173, 176, 179
TXSTA	CSRC	TX9	TXEN	SYNC	—	BRGH	TRMT	TX9D	0000 -010	166
RCSTA	SPEN	RX9	SREN	CREN	ADDEN	FERR	OERR	RX9D	0000 000x	167
EEADR	Data EEPROM Address Register								0000 0000	65, 69
EEDATA	Data EEPROM Data Register								0000 0000	69
EECON2	Data EEPROM Control Register 2 (not a physical register)								---- ----	65, 69
EECON1	EEPGD	CFGS	—	FREE	WRERR	WREN	WR	RD	xx-0 x000	66

Legend: x = unknown, u = unchanged, - = unimplemented, q = value depends on condition

Note 1: RA6 and associated bits are configured as port pins in RCIO and ECIO Oscillator mode only and read '0' in all other Oscillator modes.

2: Bit 21 of the TBLPTRU allows access to the device configuration bits.

3: These registers and bits are reserved on the PIC18F2X2 devices; always maintain these clear.

File Name	Bit 7	Bit 6	Bit 5	Bit 4	Bit 3	Bit 2	Bit 1	Bit 0	Value on POR, BOR	Details on page:
IPR2	—	—	—	EEIP	BCLIP	LVDIP	TMR3IP	CCP2IP	---1 1111	83
PIR2	—	—	—	EEIF	BCLIF	LVDIF	TMR3IF	CCP2IF	---0 0000	79
PIE2	—	—	—	EEIE	BCLIE	LVDIE	TMR3IE	CCP2IE	---0 0000	81
IPR1	PSPIP(3)	ADIP	RCIP	TXIP	SSPIP	CCP1IP	TMR2IP	TMR1IP	1111 1111	82
PIR1	PSPIF(3)	ADIF	RCIF	TXIF	SSPIF	CCP1IF	TMR2IF	TMR1IF	0000 0000	78
PIE1	PSPIE(3)	ADIE	RCIE	TXIE	SSPIE	CCP1IE	TMR2IE	TMR1IE	0000 0000	80
TRISE(3)	IBF	OBF	IBOV	PSPMODE	—	Data Direction bits for PORTE			0000 -111	98
TRISD(3)	Data Direction Control Register for PORTD								1111 1111	96
TRISC	Data Direction Control Register for PORTC								1111 1111	93
TRISB	Data Direction Control Register for PORTB								1111 1111	90
TRISA	—	TRISA6(1)	Data Direction Control Register for PORTA						-111 1111	87
LATE(3)	—	—	—	—	—	Read PORTE Data Latch, Write PORTE Data Latch			---- -xxx	99
LATD(3)	Read PORTD Data Latch, Write PORTD Data Latch								xxxx xxxx	95
LATC	Read PORTC Data Latch, Write PORTC Data Latch								xxxx xxxx	93
LATB	Read PORTB Data Latch, Write PORTB Data Latch								xxxx xxxx	90
LATA	—	LATA6(1)	Read PORTA Data Latch, Write PORTA Data Latch(1)						-xxx xxxx	87
PORTE(3)	Read PORTE pins, Write PORTE Data Latch								---- -000	99
PORTD(3)	Read PORTD pins, Write PORTD Data Latch								xxxx xxxx	95
PORTC	Read PORTC pins, Write PORTC Data Latch								xxxx xxxx	93
PORTB	Read PORTB pins, Write PORTB Data Latch								xxxx xxxx	90
PORTA	—	RA6(1)	Read PORTA pins, Write PORTA Data Latch(1)						-x0x 0000	87

Legend: x = unknown, u = unchanged, - = unimplemented, q = value depends on condition

Note 1: RA6 and associated bits are configured as port pins in RCIO and ECIO Oscillator mode only and read '0' in all other Oscillator modes.

2: Bit 21 of the TBLPTRU allows access to the device configuration bits.

3: These registers and bits are reserved on the PIC18F2X2 devices; always maintain these clear.

PIC18 Addressing Modes

- **Data Memory Access:**

Mode	Example Syntax
Direct	`clrf <reg>, <dst>`
Indirect	`clrf INDFn, <dst>`
Auto Pre-Increment Indirect	`movff PREINCn, <dst>`
Auto Post-Increment Indirect	`movff POSTINCn, <dst>`
Auto Post-Decrement Indirect	`movff POSTDECn, <dst>`
Index Indirect	`movff PLUSWn, <dst>`
Immediate (Literal)	`movlw <const>`

Register Direct Addressing

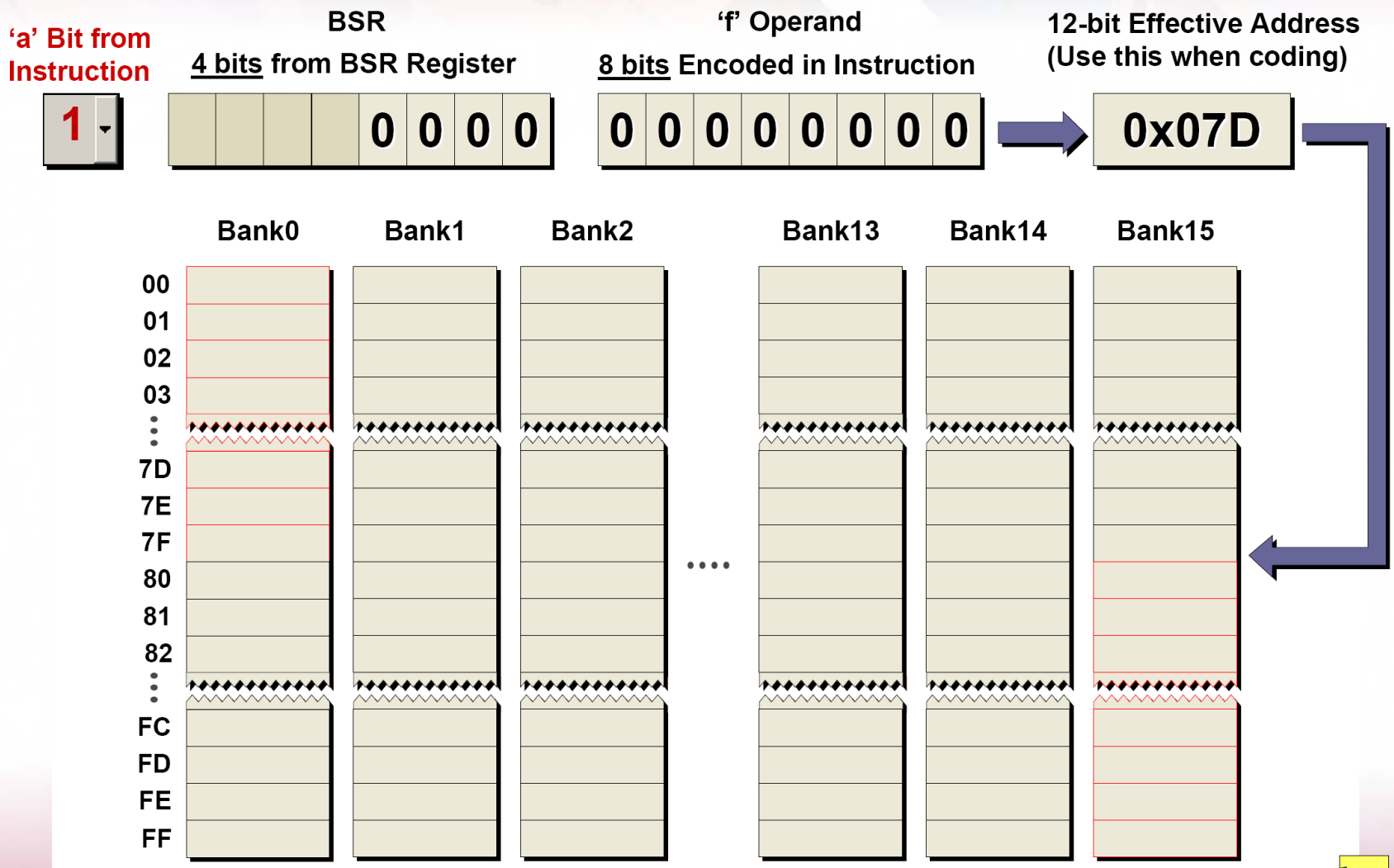

Register Direct Addressing: Example

BSR 4 bits from BSR Register	'f' Operand 8 bits Encoded in Instruction		Effective Address
0 0 0 0	0 0 0 0 0 0 0 0	=	000

```
MyReg equ 0x120

movlw  b'11110000'
movwf  TRISB, a
bsf    PORTB, 0, a
movlb  0x01
movlw  0xAA
movwf  MyReg          ; @120h
```

	Access RAM	
	Bank 0	
	Bank 1	
MyReg	FF	120h
	Bank 2	
	Bank 15	
	Access SFR	
PORTB	FF	F81h
LATB	FF	F8Ah
TRISB	FF	F93h
BSR	FF	FE0h
WREG	FF	FE8h

Op. movlb – vnos vrednosti v BSR register

Register Indirect Addressing

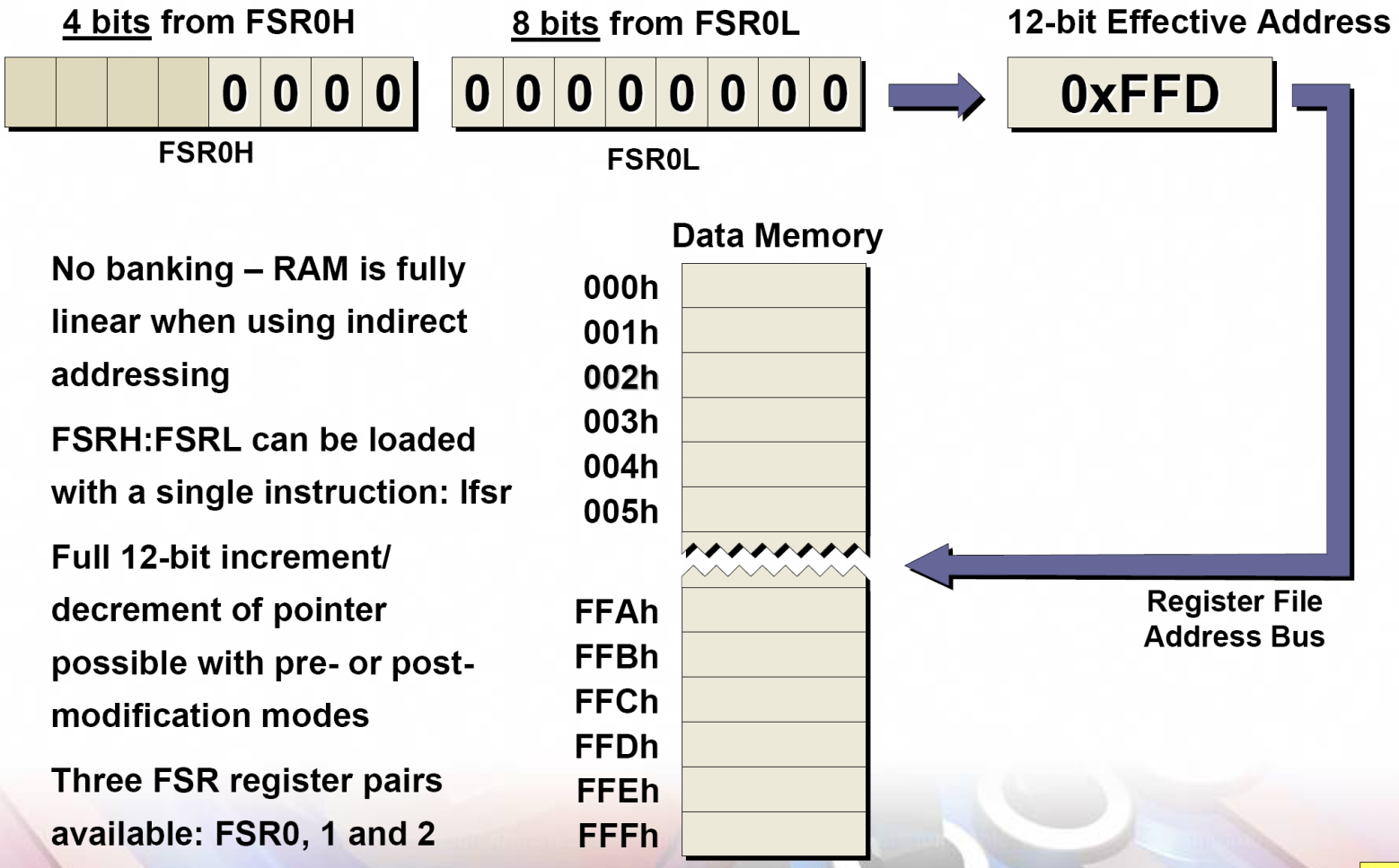

- No banking – RAM is fully linear when using indirect addressing
- FSRH:FSRL can be loaded with a single instruction: lfsr
- Full 12-bit increment/ decrement of pointer possible with pre- or post-modification modes
- Three FSR register pairs available: FSR0, 1 and 2

Posredno naslavljanje z uporabo FSR in INDF registrov

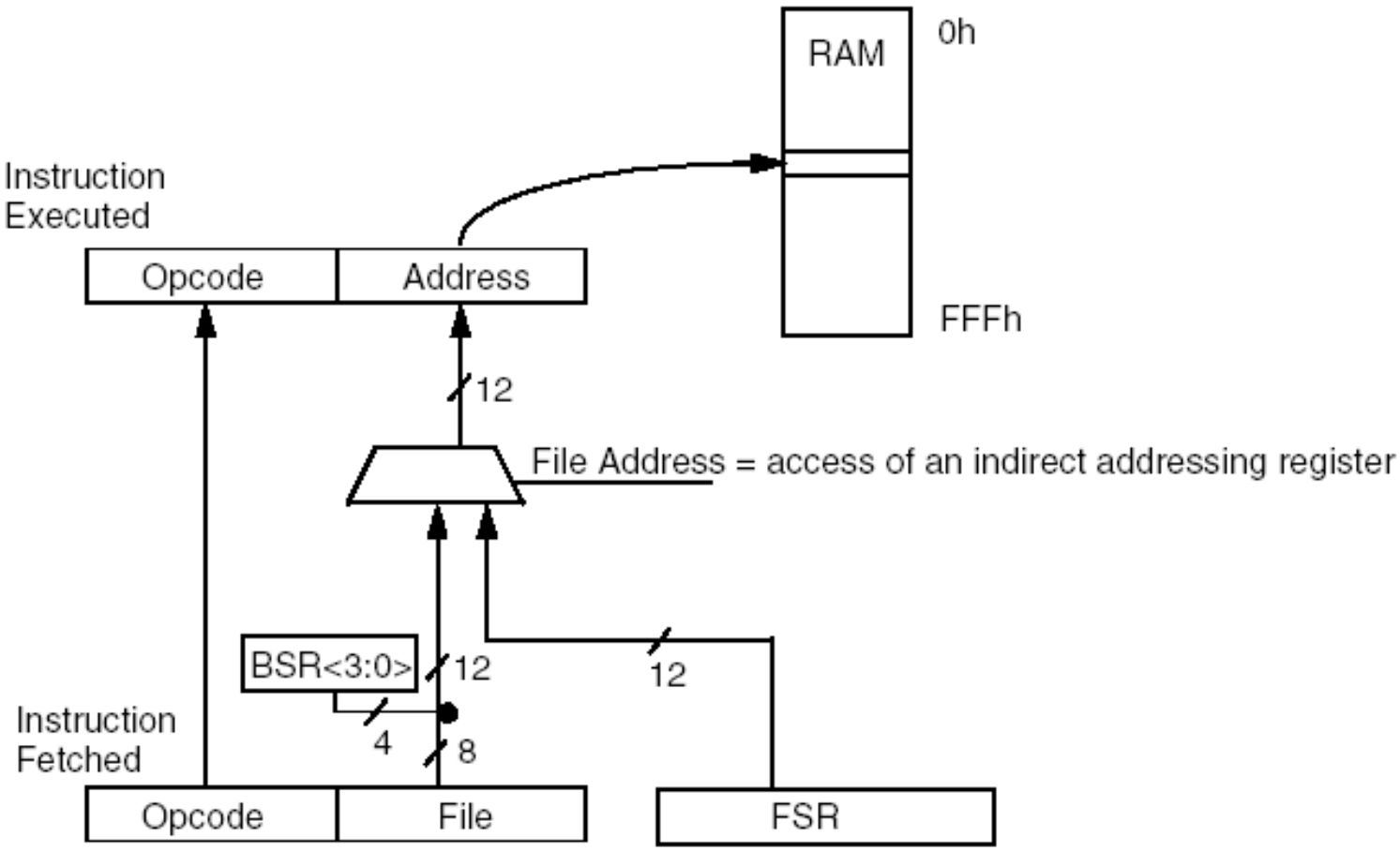

Slika 4.7: Posredno naslavljanje

Posredno naslavljanje z uporabo FSR in INDF registrov

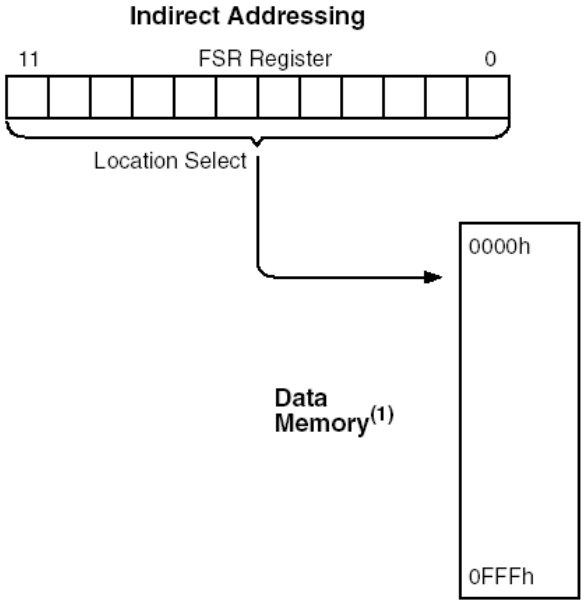

Note 1: For register file map detail, see Table 4-1.

Vloga FSR registra pri posrednem naslavljanju.

Primer uporabe posrednega naslavljanja:

```
            LFSR FSR0, 0x100 ; Naloži register
NEXT        CLRF POSTINC0    ; Briši INDF in povečaj števec za 1
            BTFSS FSR0H, 1   ; Ali je na strani 1 (Bank1) vse zbrisano?
            GOTO NEXT        ; Ne, briši naslednjo lokacijo
CONTINUE                     ; Da, nadaljuj
```

Register Indirect Addressing

- **Several additional indirect addressing modes have been added to the PIC18:**
  - Indirect – no change in FSRn
  - Auto Post-Decrement FSRn (FSRn--)
  - Auto Post-Increment FSRn (FSRn++)
  - Auto Pre-Increment FSRn (++FSRn)
  - Index Indirect (Address = FSRn + W)

Register Indirect Addressing

- **These modes are invoked by using special non-physical registers:**
  - Indirect – no change: INDFn
  - Auto Post-Decrement: POSTDECn
  - Auto Post-Increment: POSTINCn
  - Auto Pre-Increment: PREINCn
  - Index Indirect/Offset: PLUSWn

Register Indirect Addressing: Example 1

Example: Clear all RAM locations from 120h to 17Fh

				0	0	0	0

FSR0H

0	0	0	0	0	0	0	0

FSR0L

FSR0 Decimal Value: **180**

```
        lfsr    0,0x120
LOOP    clrf    POSTINC0
        btfss   FSR0L,7
        goto    LOOP
        <next instruction>
```

Register File

	FF	11Fh
	FF	120h
	FF	121h
	FF	122h
	FF	17Dh
	FF	17Eh
	FF	17Fh
	FF	180h
FSR0H	01	FE9h
FSR0L	80	FEAh
	PLUSW0	FEBh
	PREINC0	FECh
	POSTDEC0	FEDh
	POSTINC0	FEEh
	INDF0	FEFh

Register Indirect Addressing: Example 2

Example: “Spaghetti” Addressing (Don’t try this at home!)

				0	0	0	0

FSR0H

0	0	0	0	0	0	0	0

FSR0L

FSR0 Decimal Value: **129**

```
lfsr    0,0x128
clrf    INDF0
bsf     POSTDEC0,0
clrf    POSTINC0
clrf    PREINC0
movlw   0x02
clrf    PLUSW0
```

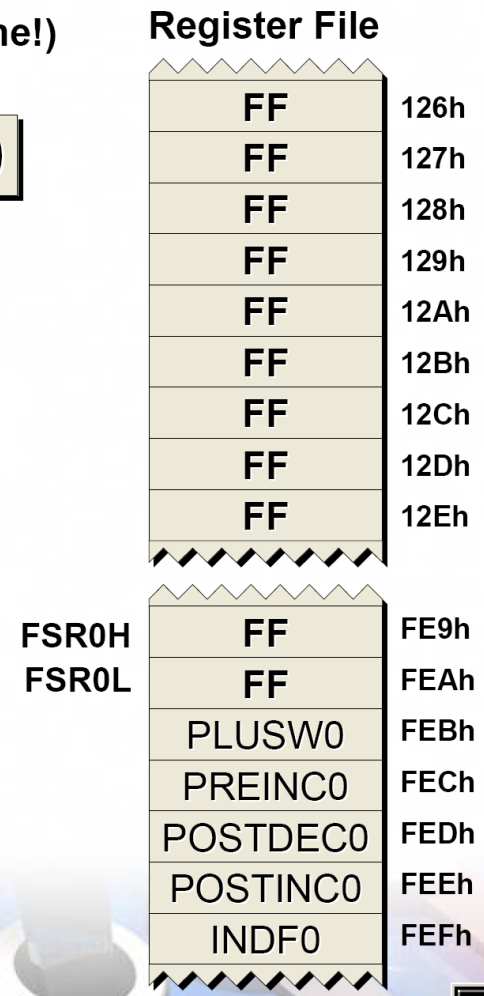

Program Memory Organization

- One, contiguous linear program memory space up to 2 MB (1M Word)

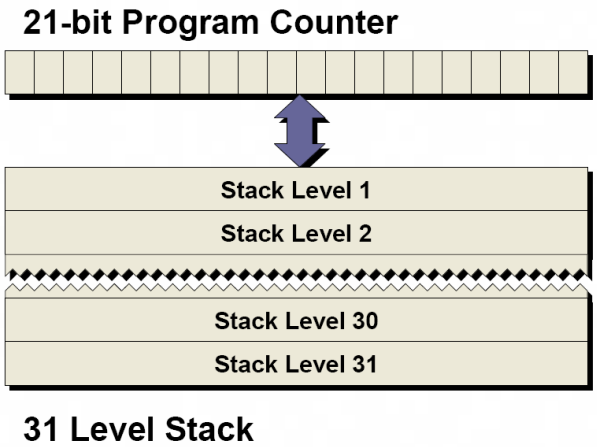

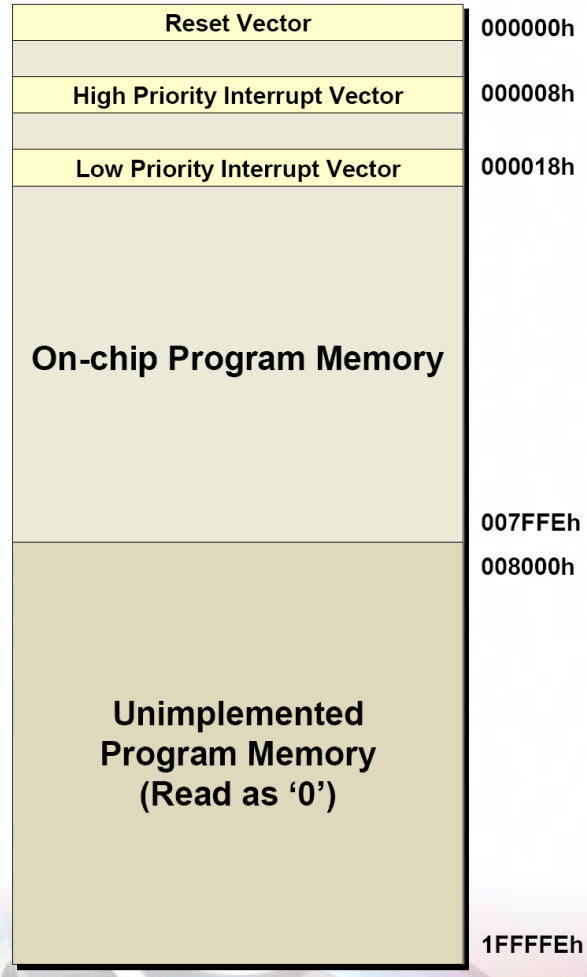

Program Memory is Byte Addressable

- Low byte has even address, high byte has odd address
- Addresses of instructions are always even

High Byte Address	16-bit Program Memory	Word Address Low Byte Address
0x000001	0 0 0 0 0 0 0 0 0 0 0 0 0 0 0 0	0x000000
0x000003	0 0 0 0 0 0 0 0 0 0 0 0 0 0 0 0	0x000002
0x000005	0 0 0 0 0 0 0 0 0 0 0 0 0 0 0 0	0x000004
0x000007	0 0 0 0 0 0 0 0 0 0 0 0 0 0 0 0	0x000006
0x000009	0 0 0 0 0 0 0 0 0 0 0 0 0 0 0 0	0x000008
0x00000B	0 0 0 0 0 0 0 0 0 0 0 0 0 0 0 0	0x00000A
0x00000D	0 0 0 0 0 0 0 0 0 0 0 0 0 0 0 0	0x00000C
0x00000F	0 0 0 0 0 0 0 0 0 0 0 0 0 0 0 0	0x00000E

Statusni register

U-0	U-0	U-0	R/W-x	R/W-x	R/W-x	R/W-x	R/W-x
—	—	—	N	OV	Z	DC	C
bit 7							bit 0

bit 7-5 **Unimplemented:** Read as '0'

bit 4 **N:** Negative bit
This bit is used for signed arithmetic (2's complement). It indicates whether the result was negative (ALU MSB = 1).
1 = Result was negative
0 = Result was positive

bit 3 **OV:** Overflow bit
This bit is used for signed arithmetic (2's complement). It indicates an overflow of the 7-bit magnitude, which causes the sign bit (bit7) to change state.
1 = Overflow occurred for signed arithmetic (in this arithmetic operation)
0 = No overflow occurred

bit 2 **Z:** Zero bit
1 = The result of an arithmetic or logic operation is zero
0 = The result of an arithmetic or logic operation is not zero

bit 1 **DC:** Digit carry/$\overline{\text{borrow}}$ bit
For `ADDWF`, `ADDLW`, `SUBLW`, and `SUBWF` instructions
1 = A carry-out from the 4th low order bit of the result occurred
0 = No carry-out from the 4th low order bit of the result

Note: For $\overline{\text{borrow}}$, the polarity is reversed. A subtraction is executed by adding the two's complement of the second operand. For rotate (`RRF`, `RLF`) instructions, this bit is loaded with either the bit 4 or bit 3 of the source register.

bit 0 **C:** Carry/$\overline{\text{borrow}}$ bit
For `ADDWF`, `ADDLW`, `SUBLW`, and `SUBWF` instructions
1 = A carry-out from the Most Significant bit of the result occurred
0 = No carry-out from the Most Significant bit of the result occurred

Note: For $\overline{\text{borrow}}$, the polarity is reversed. A subtraction is executed by adding the two's complement of the second operand. For rotate (`RRF`, `RLF`) instructions, this bit is loaded with either the high or low order bit of the source register.

Legend:			
R = Readable bit	W = Writable bit	U = Unimplemented bit, read as '0'	
- n = Value at POR	'1' = Bit is set	'0' = Bit is cleared	x = Bit is unknown

Statusni register

X	X	X	N	OV	Z	DC	C

N – Negative

OV - Overflow bit

Z – Zero bit

DC – Digit Carry

C – Carry bit

Field	Description
a	RAM access bit a = 0: RAM location in Access RAM (BSR register is ignored) a = 1: RAM bank is specified by BSR register
bbb	Bit address within an 8-bit file register (0 to 7)
BSR	Bank Select Register. Used to select the current RAM bank.
d	Destination select bit; d = 0: store result in WREG, d = 1: store result in file register f.
dest	Destination either the WREG register or the specified register file location
f	8-bit Register file address (0x00 to 0xFF)
fs	12-bit Register file address (0x000 to 0xFFF). This is the source address.
fd	12-bit Register file address (0x000 to 0xFFF). This is the destination address.
k	Literal field, constant data or label (may be either an 8-bit, 12-bit or a 20-bit value)
label	Label name
mm * *+ *- +*	The mode of the TBLPTR register for the Table Read and Table Write instructions. Only used with Table Read and Table Write instructions: No Change to register (such as TBLPTR with Table reads and writes) Post-Increment register (such as TBLPTR with Table reads and writes) Post-Decrement register (such as TBLPTR with Table reads and writes) Pre-Increment register (such as TBLPTR with Table reads and writes)
n	The relative address (2's complement number) for relative branch instructions, or the direct address for Call/Branch and Return instructions
PRODH	Product of Multiply high byte
PRODL	Product of Multiply low byte
s	Fast Call/Return mode select bit. s = 0: do not update into/from shadow registers s = 1: certain registers loaded into/from shadow registers (Fast mode)
u	Unused or Unchanged
WREG	Working register (accumulator)
x	Don't care (0 or 1) The assembler will generate code with x = 0. It is the recommended form of use for compatibility with all Microchip software tools.
TBLPTR	21-bit Table Pointer (points to a Program Memory location)
TABLAT	8-bit Table Latch
TOS	Top-of-Stack
PC	Program Counter
PCL	Program Counter Low Byte
PCH	Program Counter High Byte
PCLATH	Program Counter High Byte Latch
PCLATU	Program Counter Upper Byte Latch
GIE	Global Interrupt Enable bit
WDT	Watchdog Timer
$\overline{TO}$	Time-out bit
$\overline{PD}$	Power-down bit
C, DC, Z, OV, N	ALU status bits Carry, Digit Carry, Zero, Overflow, Negative
[ ]	Optional
( )	Contents
→	Assigned to
< >	Register bit field
∈	In the set of
italics	User defined term (font is courier)

Byte-oriented file register operations — **Example Instruction**

15 – 10	9	8	7 – 0
OPCODE	d	a	f (FILE #)

ADDWF MYREG, W, B

d = 0 for result destination to be WREG register
d = 1 for result destination to be file register (f)
a = 0 to force Access Bank
a = 1 for BSR to select bank
f = 8-bit file register address

Byte to Byte move operations (2-word)

15 – 12	11 – 0
OPCODE	f (Source FILE #)
1111	f (Destination FILE #)

MOVFF MYREG1, MYREG2

f = 12-bit file register address

Bit-oriented file register operations

15 – 12	11 – 9	8	7 – 0
OPCODE	b (BIT #)	a	f (FILE #)

BSF MYREG, bit, B

b = 3-bit position of bit in file register (f)
a = 0 to force Access Bank
a = 1 for BSR to select bank
f = 8-bit file register address

Literal operations

15 – 8	7 – 0
OPCODE	k (literal)

MOVLW 0x7F

k = 8-bit immediate value

Control operations

CALL, GOTO and Branch operations

15 – 8	7 – 0
OPCODE	n<7:0> (literal)
1111	n<19:8> (literal)

GOTO Label

n = 20-bit immediate value

15 – 8	7	7 – 0
OPCODE	S	n<7:0> (literal)
		n<19:8> (literal)

CALL MYFUNC

S = Fast bit

15 – 11	10 – 0
OPCODE	n<10:0> (literal)

BRA MYFUNC

15 – 8	7 – 0
OPCODE	n<7:0> (literal)

BC MYFUNC

Mnemonic, Operands		Description	Cycles	16-Bit Instruction Word				Status Affected	Notes
				MSb			LSb		
BYTE-ORIENTED FILE REGISTER OPERATIONS									
ADDWF	f, d, a	Add WREG and f	1	0010	01da0	ffff	ffff	C, DC, Z, OV, N	1, 2
ADDWFC	f, d, a	Add WREG and Carry bit to f	1	0010	0da	ffff	ffff	C, DC, Z, OV, N	1, 2
ANDWF	f, d, a	AND WREG with f	1	0001	01da	ffff	ffff	Z, N	1,2
CLRF	f, a	Clear f	1	0110	101a	ffff	ffff	Z	2
COMF	f, d, a	Complement f	1	0001	11da	ffff	ffff	Z, N	1, 2
CPFSEQ	f, a	Compare f with WREG, skip =	1 (2 or 3)	0110	001a	ffff	ffff	None	4
CPFSGT	f, a	Compare f with WREG, skip >	1 (2 or 3)	0110	010a	ffff	ffff	None	4
CPFSLT	f, a	Compare f with WREG, skip <	1 (2 or 3)	0110	000a	ffff	ffff	None	1, 2
DECF	f, d, a	Decrement f	1	0000	01da	ffff	ffff	C, DC, Z, OV, N	1, 2, 3, 4
DECFSZ	f, d, a	Decrement f, Skip if 0	1 (2 or 3)	0010	11da	ffff	ffff	None	1, 2, 3, 4
DCFSNZ	f, d, a	Decrement f, Skip if Not 0	1 (2 or 3)	0100	11da	ffff	ffff	None	1, 2
INCF	f, d, a	Increment f	1	0010	10da	ffff	ffff	C, DC, Z, OV, N	1, 2, 3, 4
INCFSZ	f, d, a	Increment f, Skip if 0	1 (2 or 3)	0011	11da	ffff	ffff	None	4
INFSNZ	f, d, a	Increment f, Skip if Not 0	1 (2 or 3)	0100	10da	ffff	ffff	None	1, 2
IORWF	f, d, a	Inclusive OR WREG with f	1	0001	00da	ffff	ffff	Z, N	1, 2
MOVF	f, d, a	Move f	1	0101	00da	ffff	ffff	Z, N	1
MOVFF	f_s, f_d	Move f_s (source) to 1st word	2	1100	ffff	ffff	ffff	None	
		f_d (destination) 2nd word		1111	ffff	ffff	ffff		
MOVWF	f, a	Move WREG to f	1	0110	111a	ffff	ffff	None	
MULWF	f, a	Multiply WREG with f	1	0000	001a	ffff	ffff	None	
NEGF	f, a	Negate f	1	0110	110a	ffff	ffff	C, DC, Z, OV, N	1, 2
RLCF	f, d, a	Rotate Left f through Carry	1	0011	01da	ffff	ffff	C, Z, N	
RLNCF	f, d, a	Rotate Left f (No Carry)	1	0100	01da	ffff	ffff	Z, N	1, 2
RRCF	f, d, a	Rotate Right f through Carry	1	0011	00da	ffff	ffff	C, Z, N	
RRNCF	f, d, a	Rotate Right f (No Carry)	1	0100	00da	ffff	ffff	Z, N	
SETF	f, a	Set f	1	0110	100a	ffff	ffff	None	
SUBFWB	f, d, a	Subtract f from WREG with borrow	1	0101	01da	ffff	ffff	C, DC, Z, OV, N	1, 2
SUBWF	f, d, a	Subtract WREG from f	1	0101	11da	ffff	ffff	C, DC, Z, OV, N	
SUBWFB	f, d, a	Subtract WREG from f with borrow	1	0101	10da	ffff	ffff	C, DC, Z, OV, N	1, 2
SWAPF	f, d, a	Swap nibbles in f	1	0011	10da	ffff	ffff	None	4
TSTFSZ	f, a	Test f, skip if 0	1 (2 or 3)	0110	011a	ffff	ffff	None	1, 2
XORWF	f, d, a	Exclusive OR WREG with f	1	0001	10da	ffff	ffff	Z, N	
BIT-ORIENTED FILE REGISTER OPERATIONS									
BCF	f, b, a	Bit Clear f	1	1001	bbba	ffff	ffff	None	1, 2
BSF	f, b, a	Bit Set f	1	1000	bbba	ffff	ffff	None	1, 2
BTFSC	f, b, a	Bit Test f, Skip if Clear	1 (2 or 3)	1011	bbba	ffff	ffff	None	3, 4
BTFSS	f, b, a	Bit Test f, Skip if Set	1 (2 or 3)	1010	bbba	ffff	ffff	None	3, 4
BTG	f, d, a	Bit Toggle f	1	0111	bbba	ffff	ffff	None	1, 2

Mnemonic, Operands		Description	Cycles	16-Bit Instruction Word				Status Affected	Notes
				MSb			LSb		
CONTROL OPERATIONS									
BC	n	Branch if Carry	1 (2)	1110	0010	nnnn	nnnn	None	
BN	n	Branch if Negative	1 (2)	1110	0110	nnnn	nnnn	None	
BNC	n	Branch if Not Carry	1 (2)	1110	0011	nnnn	nnnn	None	
BNN	n	Branch if Not Negative	1 (2)	1110	0111	nnnn	nnnn	None	
BNOV	n	Branch if Not Overflow	1 (2)	1110	0101	nnnn	nnnn	None	
BNZ	n	Branch if Not Zero	2	1110	0001	nnnn	nnnn	None	
BOV	n	Branch if Overflow	1 (2)	1110	0100	nnnn	nnnn	None	
BRA	n	Branch Unconditionally	1 (2)	1101	0nnn	nnnn	nnnn	None	
BZ	n	Branch if Zero	1 (2)	1110	0000	nnnn	nnnn	None	
CALL	n, s	Call subroutine1st word	2	1110	110s	kkkk	kkkk	None	
		2nd word		1111	kkkk	kkkk	kkkk		
CLRWDT	—	Clear Watchdog Timer	1	0000	0000	0000	0100	$\overline{TO}$, $\overline{PD}$	
DAW	—	Decimal Adjust WREG	1	0000	0000	0000	0111	C	
GOTO	n	Go to address1st word	2	1110	1111	kkkk	kkkk	None	
		2nd word		1111	kkkk	kkkk	kkkk		
NOP	—	No Operation	1	0000	0000	0000	0000	None	
NOP	—	No Operation	1	1111	xxxx	xxxx	xxxx	None	4
POP	—	Pop top of return stack (TOS)	1	0000	0000	0000	0110	None	
PUSH	—	Push top of return stack (TOS)	1	0000	0000	0000	0101	None	
RCALL	n	Relative Call	2	1101	1nnn	nnnn	nnnn	None	
RESET		Software device RESET	1	0000	0000	1111	1111	All	
RETFIE	s	Return from interrupt enable	2	0000	0000	0001	000s	GIE/GIEH, PEIE/GIEL	
RETLW	k	Return with literal in WREG	2	0000	1100	kkkk	kkkk	None	
RETURN	s	Return from Subroutine	2	0000	0000	0001	001s	None	
SLEEP	—	Go into Standby mode	1	0000	0000	0000	0011	$\overline{TO}$, $\overline{PD}$	

Mnemonic, Operands		Description	Cycles	16-Bit Instruction Word				Status Affected	Notes
				MSb			LSb		
LITERAL OPERATIONS									
ADDLW	k	Add literal and WREG	1	0000	1111	kkkk	kkkk	C, DC, Z, OV, N	
ANDLW	k	AND literal with WREG	1	0000	1011	kkkk	kkkk	Z, N	
IORLW	k	Inclusive OR literal with WREG	1	0000	1001	kkkk	kkkk	Z, N	
LFSR	f, k	Move literal (12-bit) 2nd word	2	1110	1110	00ff	kkkk	None	
		to FSRx 1st word		1111	0000	kkkk	kkkk		
MOVLB	k	Move literal to BSR<3:0>	1	0000	0001	0000	kkkk	None	
MOVLW	k	Move literal to WREG	1	0000	1110	kkkk	kkkk	None	
MULLW	k	Multiply literal with WREG	1	0000	1101	kkkk	kkkk	None	
RETLW	k	Return with literal in WREG	2	0000	1100	kkkk	kkkk	None	
SUBLW	k	Subtract WREG from literal	1	0000	1000	kkkk	kkkk	C, DC, Z, OV, N	
XORLW	k	Exclusive OR literal with WREG	1	0000	1010	kkkk	kkkk	Z, N	
DATA MEMORY ↔ PROGRAM MEMORY OPERATIONS									
TBLRD*		Table Read	2	0000	0000	0000	1000	None	
TBLRD*+		Table Read with post-increment		0000	0000	0000	1001	None	
TBLRD*-		Table Read with post-decrement		0000	0000	0000	1010	None	
TBLRD+*		Table Read with pre-increment		0000	0000	0000	1011	None	
TBLWT*		Table Write	2 (5)	0000	0000	0000	1100	None	
TBLWT*+		Table Write with post-increment		0000	0000	0000	1101	None	
TBLWT*-		Table Write with post-decrement		0000	0000	0000	1110	None	
TBLWT+*		Table Write with pre-increment		0000	0000	0000	1111	None	

Nabor instrukcij

ADDLW	**ADD literal to W**
Syntax:	[*label*] ADDLW k
Operands:	$0 \le k \le 255$
Operation:	(W) + k → W
Status Affected:	N, OV, C, DC, Z
Encoding:	`0000` `1111` `kkkk` `kkkk`
Description:	The contents of W are added to the 8-bit literal 'k' and the result is placed in W.
Words:	1
Cycles:	1

Q Cycle Activity:

Q1	Q2	Q3	Q4
Decode	Read literal 'k'	Process Data	Write to W

Example: `ADDLW 0x15`

Before Instruction

W = 0x10

After Instruction

W = 0x25

ADDWF	**ADD W to f**
Syntax:	[*label*] ADDWF f [,d [,a]
Operands:	$0 \le f \le 255$ $d \in [0,1]$ $a \in [0,1]$
Operation:	(W) + (f) → dest
Status Affected:	N, OV, C, DC, Z
Encoding:	`0010` `01da` `ffff` `ffff`
Description:	Add W to register 'f'. If 'd' is 0, the result is stored in W. If 'd' is 1, the result is stored back in register 'f' (default). If 'a' is 0, the Access Bank will be selected. If 'a' is 1, the BSR is used.
Words:	1
Cycles:	1

Q Cycle Activity:

Q1	Q2	Q3	Q4
Decode	Read register 'f'	Process Data	Write to destination

Example: `ADDWF REG, 0, 0`

Before Instruction

W = 0x17
REG = 0xC2

After Instruction

W = 0xD9
REG = 0xC2

ADDWFC — ADD W and Carry bit to f

Syntax:	[*label*] ADDWFC f [,d [,a]
Operands:	$0 \le f \le 255$ $d \in [0,1]$ $a \in [0,1]$
Operation:	(W) + (f) + (C) → dest
Status Affected:	N,OV, C, DC, Z
Encoding:	`0010` `00da` `ffff` `ffff`
Description:	Add W, the Carry Flag and data memory location 'f'. If 'd' is 0, the result is placed in W. If 'd' is 1, the result is placed in data memory location 'f'. If 'a' is 0, the Access Bank will be selected. If 'a' is 1, the BSR will not be overridden.
Words:	1
Cycles:	1

Q Cycle Activity:

Q1	Q2	Q3	Q4
Decode	Read register 'f'	Process Data	Write to destination

Example: `ADDWFC REG, 0, 1`

Before Instruction
- Carry bit = 1
- REG = 0x02
- W = 0x4D

After Instruction
- Carry bit = 0
- REG = 0x02
- W = 0x50

ANDLW — AND literal with W

Syntax:	[*label*] ANDLW k
Operands:	$0 \le k \le 255$
Operation:	(W) .AND. k → W
Status Affected:	N,Z
Encoding:	`0000` `1011` `kkkk` `kkkk`
Description:	The contents of W are ANDed with the 8-bit literal 'k'. The result is placed in W.
Words:	1
Cycles:	1

Q Cycle Activity:

Q1	Q2	Q3	Q4
Decode	Read literal 'k'	Process Data	Write to W

Example: `ANDLW 0x5F`

Before Instruction
- W = 0xA3

After Instruction
- W = 0x03

ANDWF — AND W with f

Syntax:	[*label*] ANDWF f [,d [,a]
Operands:	$0 \le f \le 255$ $d \in [0,1]$ $a \in [0,1]$
Operation:	(W) .AND. (f) → dest
Status Affected:	N,Z
Encoding:	`0001` `01da` `ffff` `ffff`
Description:	The contents of W are AND'ed with register 'f'. If 'd' is 0, the result is stored in W. If 'd' is 1, the result is stored back in register 'f' (default). If 'a' is 0, the Access Bank will be selected. If 'a' is 1, the BSR will not be overridden (default).
Words:	1
Cycles:	1

Q Cycle Activity:

Q1	Q2	Q3	Q4
Decode	Read register 'f'	Process Data	Write to destination

Example: `ANDWF REG, 0, 0`

Before Instruction

W = 0x17
REG = 0xC2

After Instruction

W = 0x02
REG = 0xC2

BC — Branch if Carry

Syntax:	[*label*] BC n
Operands:	$-128 \le n \le 127$
Operation:	if carry bit is '1' (PC) + 2 + 2n → PC
Status Affected:	None
Encoding:	`1110` `0010` `nnnn` `nnnn`
Description:	If the Carry bit is '1', then the program will branch. The 2's complement number '2n' is added to the PC. Since the PC will have incremented to fetch the next instruction, the new address will be PC+2+2n. This instruction is then a two-cycle instruction.
Words:	1
Cycles:	1(2)

Q Cycle Activity:
If Jump:

Q1	Q2	Q3	Q4
Decode	Read literal 'n'	Process Data	Write to PC
No operation	No operation	No operation	No operation

If No Jump:

Q1	Q2	Q3	Q4
Decode	Read literal 'n'	Process Data	No operation

Example: `HERE BC 5`

Before Instruction

PC = address (HERE)

After Instruction

If Carry = 1;
PC = address (HERE+12)
If Carry = 0;
PC = address (HERE+2)

BCF	**Bit Clear f**
Syntax:	[*label*] BCF f,b[,a]
Operands:	$0 \le f \le 255$ $0 \le b \le 7$ $a \in [0,1]$
Operation:	$0 \rightarrow f<b>$
Status Affected:	None
Encoding:	1001 | bbba | ffff | ffff
Description:	Bit 'b' in register 'f' is cleared. If 'a' is 0, the Access Bank will be selected, overriding the BSR value. If 'a' = 1, then the bank will be selected as per the BSR value (default).
Words:	1
Cycles:	1

Q Cycle Activity:

Q1	Q2	Q3	Q4
Decode	Read register 'f'	Process Data	Write register 'f'

Example: `BCF FLAG_REG, 7, 0`

Before Instruction
FLAG_REG = 0xC7
After Instruction
FLAG_REG = 0x47

BN	**Branch if Negative**
Syntax:	[*label*] BN n
Operands:	$-128 \le n \le 127$
Operation:	if negative bit is '1' (PC) + 2 + 2n → PC
Status Affected:	None
Encoding:	1110 | 0110 | nnnn | nnnn
Description:	If the Negative bit is '1', then the program will branch. The 2's complement number '2n' is added to the PC. Since the PC will have incremented to fetch the next instruction, the new address will be PC+2+2n. This instruction is then a two-cycle instruction.
Words:	1
Cycles:	1(2)

Q Cycle Activity:
If Jump:

Q1	Q2	Q3	Q4
Decode	Read literal 'n'	Process Data	Write to PC
No operation	No operation	No operation	No operation

If No Jump:

Q1	Q2	Q3	Q4
Decode	Read literal 'n'	Process Data	No operation

Example: `HERE BN Jump`

Before Instruction
PC = address (HERE)
After Instruction
If Negative = 1;
PC = address (Jump)
If Negative = 0;
PC = address (HERE+2)

BNC — Branch if Not Carry

Syntax:	[*label*] BNC n
Operands:	$-128 \le n \le 127$
Operation:	if carry bit is '0' (PC) + 2 + 2n → PC
Status Affected:	None
Encoding:	`1110` `0011` `nnnn` `nnnn`
Description:	If the Carry bit is '0', then the program will branch. The 2's complement number '2n' is added to the PC. Since the PC will have incremented to fetch the next instruction, the new address will be PC+2+2n. This instruction is then a two-cycle instruction.
Words:	1
Cycles:	1(2)

Q Cycle Activity:

If Jump:

Q1	Q2	Q3	Q4
Decode	Read literal 'n'	Process Data	Write to PC
No operation	No operation	No operation	No operation

If No Jump:

Q1	Q2	Q3	Q4
Decode	Read literal 'n'	Process Data	No operation

Example: `HERE BNC Jump`

Before Instruction

PC = address (HERE)

After Instruction

If Carry = 0;
PC = address (Jump)
If Carry = 1;
PC = address (HERE+2)

BNN — Branch if Not Negative

Syntax:	[*label*] BNN n
Operands:	$-128 \le n \le 127$
Operation:	if negative bit is '0' (PC) + 2 + 2n → PC
Status Affected:	None
Encoding:	`1110` `0111` `nnnn` `nnnn`
Description:	If the Negative bit is '0', then the program will branch. The 2's complement number '2n' is added to the PC. Since the PC will have incremented to fetch the next instruction, the new address will be PC+2+2n. This instruction is then a two-cycle instruction.
Words:	1
Cycles:	1(2)

Q Cycle Activity:

If Jump:

Q1	Q2	Q3	Q4
Decode	Read literal 'n'	Process Data	Write to PC
No operation	No operation	No operation	No operation

If No Jump:

Q1	Q2	Q3	Q4
Decode	Read literal 'n'	Process Data	No operation

Example: `HERE BNN Jump`

Before Instruction

PC = address (HERE)

After Instruction

If Negative = 0;
PC = address (Jump)
If Negative = 1;
PC = address (HERE+2)

BNOV — Branch if Not Overflow

Syntax:	[*label*] BNOV n
Operands:	$-128 \le n \le 127$
Operation:	if overflow bit is '0' (PC) + 2 + 2n → PC
Status Affected:	None
Encoding:	1110 | 0101 | nnnn | nnnn
Description:	If the Overflow bit is '0', then the program will branch. The 2's complement number '2n' is added to the PC. Since the PC will have incremented to fetch the next instruction, the new address will be PC+2+2n. This instruction is then a two-cycle instruction.
Words:	1
Cycles:	1(2)

Q Cycle Activity:

If Jump:

Q1	Q2	Q3	Q4
Decode	Read literal 'n'	Process Data	Write to PC
No operation	No operation	No operation	No operation

If No Jump:

Q1	Q2	Q3	Q4
Decode	Read literal 'n'	Process Data	No operation

Example: `HERE BNOV Jump`

Before Instruction
PC = address (HERE)

After Instruction
If Overflow = 0;
PC = address (Jump)
If Overflow = 1;
PC = address (HERE+2)

BNZ — Branch if Not Zero

Syntax:	[*label*] BNZ n
Operands:	$-128 \le n \le 127$
Operation:	if zero bit is '0' (PC) + 2 + 2n → PC
Status Affected:	None
Encoding:	1110 | 0001 | nnnn | nnnn
Description:	If the Zero bit is '0', then the program will branch. The 2's complement number '2n' is added to the PC. Since the PC will have incremented to fetch the next instruction, the new address will be PC+2+2n. This instruction is then a two-cycle instruction.
Words:	1
Cycles:	1(2)

Q Cycle Activity:

If Jump:

Q1	Q2	Q3	Q4
Decode	Read literal 'n'	Process Data	Write to PC
No operation	No operation	No operation	No operation

If No Jump:

Q1	Q2	Q3	Q4
Decode	Read literal 'n'	Process Data	No operation

Example: `HERE BNZ Jump`

Before Instruction
PC = address (HERE)

After Instruction
If Zero = 0;
PC = address (Jump)
If Zero = 1;
PC = address (HERE+2)

BTFSC — Bit Test File, Skip if Clear

Syntax:	[*label*] BTFSC f,b[,a]
Operands:	$0 \le f \le 255$ $0 \le b \le 7$ $a \in [0,1]$
Operation:	skip if (f<b>) = 0
Status Affected:	None
Encoding:	`1011` `bbba` `ffff` `ffff`
Description:	If bit 'b' in register 'f' is 0, then the next instruction is skipped. If bit 'b' is 0, then the next instruction fetched during the current instruction execution is discarded, and a `NOP` is executed instead, making this a two-cycle instruction. If 'a' is 0, the Access Bank will be selected, overriding the BSR value. If 'a' = 1, then the bank will be selected as per the BSR value (default).
Words:	1
Cycles:	1(2) **Note:** 3 cycles if skip and followed by a 2-word instruction.

Q Cycle Activity:

Q1	Q2	Q3	Q4
Decode	Read register 'f'	Process Data	No operation

If skip:

Q1	Q2	Q3	Q4
No operation	No operation	No operation	No operation

If skip and followed by 2-word instruction:

Q1	Q2	Q3	Q4
No operation	No operation	No operation	No operation
No operation	No operation	No operation	No operation

Example:

```
HERE    BTFSC   FLAG, 1, 0
FALSE   :
TRUE    :
```

Before Instruction
PC = address (HERE)

After Instruction
If FLAG<1> = 0;
PC = address (TRUE)
If FLAG<1> = 1;
PC = address (FALSE)

BTFSS — Bit Test File, Skip if Set

Syntax:	[*label*] BTFSS f,b[,a]
Operands:	$0 \le f \le 255$ $0 \le b \le 7$ $a \in [0,1]$
Operation:	skip if (f<b>) = 1
Status Affected:	None
Encoding:	`1010` `bbba` `ffff` `ffff`
Description:	If bit 'b' in register 'f' is 1, then the next instruction is skipped. If bit 'b' is 1, then the next instruction fetched during the current instruction execution, is discarded and a `NOP` is executed instead, making this a two-cycle instruction. If 'a' is 0, the Access Bank will be selected, overriding the BSR value. If 'a' = 1, then the bank will be selected as per the BSR value (default).
Words:	1
Cycles:	1(2) **Note:** 3 cycles if skip and followed by a 2-word instruction.

Q Cycle Activity:

Q1	Q2	Q3	Q4
Decode	Read register 'f'	Process Data	No operation

If skip:

Q1	Q2	Q3	Q4
No operation	No operation	No operation	No operation

If skip and followed by 2-word instruction:

Q1	Q2	Q3	Q4
No operation	No operation	No operation	No operation
No operation	No operation	No operation	No operation

Example:

```
HERE    BTFSS   FLAG, 1, 0
FALSE   :
TRUE    :
```

Before Instruction
PC = address (HERE)

After Instruction
If FLAG<1> = 0;
PC = address (FALSE)
If FLAG<1> = 1;
PC = address (TRUE)

BTG — Bit Toggle f

Syntax:	[*label*] BTG f,b[,a]
Operands:	$0 \le f \le 255$ $0 \le b \le 7$ $a \in [0,1]$
Operation:	$(\overline{f<b>}) \rightarrow f<b>$
Status Affected:	None
Encoding:	`0111` `bbba` `ffff` `ffff`
Description:	Bit 'b' in data memory location 'f' is inverted. If 'a' is 0, the Access Bank will be selected, overriding the BSR value. If 'a' = 1, then the bank will be selected as per the BSR value (default).
Words:	1
Cycles:	1

Q Cycle Activity:

Q1	Q2	Q3	Q4
Decode	Read register 'f'	Process Data	Write register 'f'

Example: `BTG PORTC, 4, 0`

Before Instruction:
PORTC = `0111 0101` [0x75]

After Instruction:
PORTC = `0110 0101` [0x65]

BOV — Branch if Overflow

Syntax:	[*label*] BOV n
Operands:	$-128 \le n \le 127$
Operation:	if overflow bit is '1' $(PC) + 2 + 2n \rightarrow PC$
Status Affected:	None
Encoding:	`1110` `0100` `nnnn` `nnnn`
Description:	If the Overflow bit is '1', then the program will branch. The 2's complement number '2n' is added to the PC. Since the PC will have incremented to fetch the next instruction, the new address will be PC+2+2n. This instruction is then a two-cycle instruction.
Words:	1
Cycles:	1(2)

Q Cycle Activity:
If Jump:

Q1	Q2	Q3	Q4
Decode	Read literal 'n'	Process Data	Write to PC
No operation	No operation	No operation	No operation

If No Jump:

Q1	Q2	Q3	Q4
Decode	Read literal 'n'	Process Data	No operation

Example: `HERE BOV Jump`

Before Instruction
PC = address `(HERE)`

After Instruction
If Overflow = 1;
PC = address `(Jump)`
If Overflow = 0;
PC = address `(HERE+2)`

BZ — Branch if Zero

Syntax:	[*label*] BZ n
Operands:	$-128 \le n \le 127$
Operation:	if Zero bit is '1' (PC) + 2 + 2n → PC
Status Affected:	None
Encoding:	`1110` `0000` `nnnn` `nnnn`
Description:	If the Zero bit is '1', then the program will branch. The 2's complement number '2n' is added to the PC. Since the PC will have incremented to fetch the next instruction, the new address will be PC+2+2n. This instruction is then a two-cycle instruction.
Words:	1
Cycles:	1(2)

Q Cycle Activity:

If Jump:

Q1	Q2	Q3	Q4
Decode	Read literal 'n'	Process Data	Write to PC
No operation	No operation	No operation	No operation

If No Jump:

Q1	Q2	Q3	Q4
Decode	Read literal 'n'	Process Data	No operation

Example: `HERE BZ Jump`

Before Instruction
PC = address (HERE)

After Instruction
If Zero = 1;
PC = address (Jump)
If Zero = 0;
PC = address (HERE+2)

CALL — Subroutine Call

Syntax:	[*label*] CALL k [,s]
Operands:	$0 \le k \le 1048575$ $s \in [0,1]$
Operation:	(PC) + 4 → TOS, k → PC<20:1>, if s = 1 (W) → WS, (STATUS) → STATUSS, (BSR) → BSRS
Status Affected:	None

Encoding:

1st word (k<7:0>)	`1110`	`110s`	$k_7$kkk	kkkk_0
2nd word(k<19:8>)	`1111`	k_{19}kkk	kkkk	kkkk_8

Description:	Subroutine call of entire 2 Mbyte memory range. First, return address (PC+ 4) is pushed onto the return stack. If 's' = 1, the W, STATUS and BSR registers are also pushed into their respective shadow registers, WS, STATUSS and BSRS. If 's' = 0, no update occurs (default). Then, the 20-bit value 'k' is loaded into PC<20:1>. `CALL` is a two-cycle instruction.
Words:	2
Cycles:	2

Q Cycle Activity:

Q1	Q2	Q3	Q4
Decode	Read literal 'k'<7:0>,	Push PC to stack	Read literal 'k'<19:8>, Write to PC
No operation	No operation	No operation	No operation

Example: `HERE CALL THERE,1`

Before Instruction
PC = address (HERE)

After Instruction
PC = address (THERE)
TOS = address (HERE + 4)
WS = W
BSRS = BSR
STATUSS = STATUS

CLRF — Clear f

Syntax:	[*label*] CLRF f [,a]
Operands:	$0 \le f \le 255$ $a \in [0,1]$
Operation:	000h → f 1 → Z
Status Affected:	Z
Encoding:	0110 101a ffff ffff
Description:	Clears the contents of the specified register. If 'a' is 0, the Access Bank will be selected, overriding the BSR value. If 'a' = 1, then the bank will be selected as per the BSR value (default).
Words:	1
Cycles:	1

Q Cycle Activity:

Q1	Q2	Q3	Q4
Decode	Read register 'f'	Process Data	Write register 'f'

Example: `CLRF FLAG_REG,1`

Before Instruction
FLAG_REG = 0x5A
After Instruction
FLAG_REG = 0x00

CLRWDT — Clear Watchdog Timer

Syntax:	[*label*] CLRWDT
Operands:	None
Operation:	000h → WDT, 000h → WDT postscaler, 1 → $\overline{TO}$, 1 → $\overline{PD}$
Status Affected:	$\overline{TO}$, $\overline{PD}$
Encoding:	0000 0000 0000 0100
Description:	`CLRWDT` instruction resets the Watchdog Timer. It also resets the postscaler of the WDT. Status bits $\overline{TO}$ and $\overline{PD}$ are set.
Words:	1
Cycles:	1

Q Cycle Activity:

Q1	Q2	Q3	Q4
Decode	No operation	Process Data	No operation

Example: `CLRWDT`

Before Instruction
WDT Counter = ?
After Instruction
WDT Counter = 0x00
WDT Postscaler = 0
$\overline{TO}$ = 1
$\overline{PD}$ = 1

COMF — Complement f

Syntax:	[*label*] COMF f [,d [,a]
Operands:	$0 \le f \le 255$ $d \in [0,1]$ $a \in [0,1]$
Operation:	$(\overline{f}) \rightarrow$ dest
Status Affected:	N, Z
Encoding:	`0001` `11da` `ffff` `ffff`
Description:	The contents of register 'f' are complemented. If 'd' is 0, the result is stored in W. If 'd' is 1, the result is stored back in register 'f' (default). If 'a' is 0, the Access Bank will be selected, overriding the BSR value. If 'a' = 1, then the bank will be selected as per the BSR value (default).
Words:	1
Cycles:	1

Q Cycle Activity:

Q1	Q2	Q3	Q4
Decode	Read register 'f'	Process Data	Write to destination

Example: `COMF REG, 0, 0`

Before Instruction
REG = 0x13
After Instruction
REG = 0x13
W = 0xEC

CPFSEQ — Compare f with W, skip if f = W

Syntax:	[*label*] CPFSEQ f [,a]
Operands:	$0 \le f \le 255$ $a \in [0,1]$
Operation:	(f) – (W), skip if (f) = (W) (unsigned comparison)
Status Affected:	None
Encoding:	`0110` `001a` `ffff` `ffff`
Description:	Compares the contents of data memory location 'f' to the contents of W by performing an unsigned subtraction. If 'f' = W, then the fetched instruction is discarded and a `NOP` is executed instead, making this a two-cycle instruction. If 'a' is 0, the Access Bank will be selected, overriding the BSR value. If 'a' = 1, then the bank will be selected as per the BSR value (default).
Words:	1
Cycles:	1(2) **Note:** 3 cycles if skip and followed by a 2-word instruction.

Q Cycle Activity:

Q1	Q2	Q3	Q4
Decode	Read register 'f'	Process Data	No operation

If skip:

Q1	Q2	Q3	Q4
No operation	No operation	No operation	No operation

If skip and followed by 2-word instruction:

Q1	Q2	Q3	Q4
No operation	No operation	No operation	No operation
No operation	No operation	No operation	No operation

Example:
```
HERE     CPFSEQ REG, 0
NEQUAL   :
EQUAL    :
```

Before Instruction
PC Address = HERE
W = ?
REG = ?
After Instruction
If REG = W;
PC = Address (EQUAL)
If REG ≠ W;
PC = Address (NEQUAL)

CPFSGT — Compare f with W, skip if f > W

Syntax:	[*label*] CPFSGT f [,a]
Operands:	$0 \le f \le 255$ $a \in [0,1]$
Operation:	(f) – (W), skip if (f) > (W) (unsigned comparison)
Status Affected:	None
Encoding:	`0110` `010a` `ffff` `ffff`
Description:	Compares the contents of data memory location 'f' to the contents of the W by performing an unsigned subtraction. If the contents of 'f' are greater than the contents of WREG, then the fetched instruction is discarded and a `NOP` is executed instead, making this a two-cycle instruction. If 'a' is 0, the Access Bank will be selected, overriding the BSR value. If 'a' = 1, then the bank will be selected as per the BSR value (default).
Words:	1
Cycles:	1(2) **Note:** 3 cycles if skip and followed by a 2-word instruction.

Q Cycle Activity:

Q1	Q2	Q3	Q4
Decode	Read register 'f'	Process Data	No operation

If skip:

Q1	Q2	Q3	Q4
No operation	No operation	No operation	No operation

If skip and followed by 2-word instruction:

Q1	Q2	Q3	Q4
No operation	No operation	No operation	No operation
No operation	No operation	No operation	No operation

Example:

```
HERE      CPFSGT REG, 0
NGREATER  :
GREATER   :
```

Before Instruction
PC = Address (HERE)
W = ?

After Instruction
If REG > W;
PC = Address (GREATER)
If REG ≤ W;
PC = Address (NGREATER)

CPFSLT — Compare f with W, skip if f < W

Syntax:	[*label*] CPFSLT f [,a]
Operands:	$0 \le f \le 255$ $a \in [0,1]$
Operation:	(f) – (W), skip if (f) < (W) (unsigned comparison)
Status Affected:	None
Encoding:	`0110` `000a` `ffff` `ffff`
Description:	Compares the contents of data memory location 'f' to the contents of W by performing an unsigned subtraction. If the contents of 'f' are less than the contents of W, then the fetched instruction is discarded and a `NOP` is executed instead, making this a two-cycle instruction. If 'a' is 0, the Access Bank will be selected. If 'a' is 1, the BSR will not be overridden (default).
Words:	1
Cycles:	1(2) **Note:** 3 cycles if skip and followed by a 2-word instruction.

Q Cycle Activity:

Q1	Q2	Q3	Q4
Decode	Read register 'f'	Process Data	No operation

If skip:

Q1	Q2	Q3	Q4
No operation	No operation	No operation	No operation

If skip and followed by 2-word instruction:

Q1	Q2	Q3	Q4
No operation	No operation	No operation	No operation
No operation	No operation	No operation	No operation

Example:

```
HERE    CPFSLT REG, 1
NLESS   :
LESS    :
```

Before Instruction
PC = Address (HERE)
W = ?

After Instruction
If REG < W;
PC = Address (LESS)
If REG ≥ W;
PC = Address (NLESS)

DAW — Decimal Adjust W Register

Syntax:	[*label*] DAW
Operands:	None

Operation:	If [W<3:0> >9] or [DC = 1] then
	(W<3:0>) + 6 → W<3:0>;
	else
	(W<3:0>) → W<3:0>;
	
	If [W<7:4> >9] or [C = 1] then
	(W<7:4>) + 6 → W<7:4>;
	else
	(W<7:4>) → W<7:4>;

Status Affected:	C
Encoding:	`0000` `0000` `0000` `0111`
Description:	`DAW` adjusts the eight-bit value in W, resulting from the earlier addition of two variables (each in packed BCD format) and produces a correct packed BCD result.
Words:	1
Cycles:	1

Q Cycle Activity:

Q1	Q2	Q3	Q4
Decode	Read register W	Process Data	Write W

Example1: `DAW`

Before Instruction

W = 0xA5
C = 0
DC = 0

After Instruction

W = 0x05
C = 1
DC = 0

Example 2:

Before Instruction

W = 0xCE
C = 0
DC = 0

After Instruction

W = 0x34
C = 1
DC = 0

DECF — Decrement f

Syntax:	[*label*] DECF f [,d [,a]
Operands:	$0 \le f \le 255$ $d \in [0,1]$ $a \in [0,1]$
Operation:	(f) – 1 → dest
Status Affected:	C, DC, N, OV, Z
Encoding:	`0000` `01da` `ffff` `ffff`
Description:	Decrement register 'f'. If 'd' is 0, the result is stored in W. If 'd' is 1, the result is stored back in register 'f' (default). If 'a' is 0, the Access Bank will be selected, overriding the BSR value. If 'a' = 1, then the bank will be selected as per the BSR value (default).
Words:	1
Cycles:	1

Q Cycle Activity:

Q1	Q2	Q3	Q4
Decode	Read register 'f'	Process Data	Write to destination

Example: `DECF CNT, 1, 0`

Before Instruction

CNT = 0x01
Z = 0

After Instruction

CNT = 0x00
Z = 1

DECFSZ — Decrement f, skip if 0

Syntax:	[*label*] DECFSZ f [,d [,a]]
Operands:	$0 \le f \le 255$ $d \in [0,1]$ $a \in [0,1]$
Operation:	(f) – 1 → dest, skip if result = 0
Status Affected:	None
Encoding:	`0010` `11da` `ffff` `ffff`
Description:	The contents of register 'f' are decremented. If 'd' is 0, the result is placed in W. If 'd' is 1, the result is placed back in register 'f' (default). If the result is 0, the next instruction, which is already fetched, is discarded, and a `NOP` is executed instead, making it a two-cycle instruction. If 'a' is 0, the Access Bank will be selected, overriding the BSR value. If 'a' = 1, then the bank will be selected as per the BSR value (default).
Words:	1
Cycles:	1(2) **Note:** 3 cycles if skip and followed by a 2-word instruction.

Q Cycle Activity:

Q1	Q2	Q3	Q4
Decode	Read register 'f'	Process Data	Write to destination

If skip:

Q1	Q2	Q3	Q4
No operation	No operation	No operation	No operation

If skip and followed by 2-word instruction:

Q1	Q2	Q3	Q4
No operation	No operation	No operation	No operation
No operation	No operation	No operation	No operation

Example:

```
HERE      DECFSZ   CNT, 1, 1
          GOTO     LOOP
CONTINUE
```

Before Instruction
PC = Address (HERE)

After Instruction
CNT = CNT - 1
If CNT = 0;
PC = Address (CONTINUE)
If CNT ≠ 0;
PC = Address (HERE+2)

DCFSNZ — Decrement f, skip if not 0

Syntax:	[*label*] DCFSNZ f [,d [,a]
Operands:	$0 \le f \le 255$ $d \in [0,1]$ $a \in [0,1]$
Operation:	(f) – 1 → dest, skip if result ≠ 0
Status Affected:	None
Encoding:	`0100` `11da` `ffff` `ffff`
Description:	The contents of register 'f' are decremented. If 'd' is 0, the result is placed in W. If 'd' is 1, the result is placed back in register 'f' (default). If the result is not 0, the next instruction, which is already fetched, is discarded, and a `NOP` is executed instead, making it a two-cycle instruction. If 'a' is 0, the Access Bank will be selected, overriding the BSR value. If 'a' = 1, then the bank will be selected as per the BSR value (default).
Words:	1
Cycles:	1(2) **Note:** 3 cycles if skip and followed by a 2-word instruction.

Q Cycle Activity:

Q1	Q2	Q3	Q4
Decode	Read register 'f'	Process Data	Write to destination

If skip:

Q1	Q2	Q3	Q4
No operation	No operation	No operation	No operation

If skip and followed by 2-word instruction:

Q1	Q2	Q3	Q4
No operation	No operation	No operation	No operation
No operation	No operation	No operation	No operation

Example:

```
HERE    DCFSNZ  TEMP, 1, 0
ZERO    :
NZERO   :
```

Before Instruction
TEMP = ?

After Instruction
TEMP = TEMP - 1,
If TEMP = 0;
PC = Address (ZERO)
If TEMP ≠ 0;
PC = Address (NZERO)

GOTO — Unconditional Branch

Syntax: [*label*] GOTO k

Operands: $0 \le k \le 1048575$

Operation: k → PC<20:1>

Status Affected: None

Encoding:

1st word (k<7:0>)	1110	1111	$k_7$kkk	kkkk$_0$
2nd word(k<19:8>)	1111	k_{19}kkk	kkkk	kkkk$_8$

Description: GOTO allows an unconditional branch anywhere within entire 2 Mbyte memory range. The 20-bit value 'k' is loaded into PC<20:1>. GOTO is always a two-cycle instruction.

Words: 2

Cycles: 2

Q Cycle Activity:

Q1	Q2	Q3	Q4
Decode	Read literal 'k'<7:0>,	No operation	Read literal 'k'<19:8>, Write to PC
No operation	No operation	No operation	No operation

Example: `GOTO THERE`

After Instruction
PC = Address (THERE)

INCF — Increment f

Syntax: [*label*] INCF f [,d [,a]

Operands: $0 \le f \le 255$
$d \in [0,1]$
$a \in [0,1]$

Operation: (f) + 1 → dest

Status Affected: C, DC, N, OV, Z

Encoding:

0010	10da	ffff	ffff

Description: The contents of register 'f' are incremented. If 'd' is 0, the result is placed in W. If 'd' is 1, the result is placed back in register 'f' (default). If 'a' is 0, the Access Bank will be selected, overriding the BSR value. If 'a' = 1, then the bank will be selected as per the BSR value (default).

Words: 1

Cycles: 1

Q Cycle Activity:

Q1	Q2	Q3	Q4
Decode	Read register 'f'	Process Data	Write to destination

Example: `INCF CNT, 1, 0`

Before Instruction
CNT = 0xFF
Z = 0
C = ?
DC = ?

After Instruction
CNT = 0x00
Z = 1
C = 1
DC = 1

INCFSZ — Increment f, skip if 0

Syntax:	[*label*] INCFSZ f [,d [,a]
Operands:	$0 \le f \le 255$ $d \in [0,1]$ $a \in [0,1]$
Operation:	(f) + 1 → dest, skip if result = 0
Status Affected:	None
Encoding:	`0011` `11da` `ffff` `ffff`
Description:	The contents of register 'f' are incremented. If 'd' is 0, the result is placed in W. If 'd' is 1, the result is placed back in register 'f'. (default) If the result is 0, the next instruction, which is already fetched, is discarded, and a `NOP` is executed instead, making it a two-cycle instruction. If 'a' is 0, the Access Bank will be selected, overriding the BSR value. If 'a' = 1, then the bank will be selected as per the BSR value (default).
Words:	1
Cycles:	1(2) **Note:** 3 cycles if skip and followed by a 2-word instruction.

Q Cycle Activity:

Q1	Q2	Q3	Q4
Decode	Read register 'f'	Process Data	Write to destination

If skip:

Q1	Q2	Q3	Q4
No operation	No operation	No operation	No operation

If skip and followed by 2-word instruction:

Q1	Q2	Q3	Q4
No operation	No operation	No operation	No operation
No operation	No operation	No operation	No operation

Example:

```
HERE    INCFSZ   CNT, 1, 0
NZERO   :
ZERO    :
```

Before Instruction
PC = Address (HERE)

After Instruction
CNT = CNT + 1
If CNT = 0;
PC = Address (ZERO)
If CNT ≠ 0;
PC = Address (NZERO)

INFSNZ — Increment f, skip if not 0

Syntax:	[*label*] INFSNZ f [,d [,a]
Operands:	$0 \le f \le 255$ $d \in [0,1]$ $a \in [0,1]$
Operation:	(f) + 1 → dest, skip if result ≠ 0
Status Affected:	None
Encoding:	`0100` `10da` `ffff` `ffff`
Description:	The contents of register 'f' are incremented. If 'd' is 0, the result is placed in W. If 'd' is 1, the result is placed back in register 'f' (default). If the result is not 0, the next instruction, which is already fetched, is discarded, and a `NOP` is executed instead, making it a two-cycle instruction. If 'a' is 0, the Access Bank will be selected, overriding the BSR value. If 'a' = 1, then the bank will be selected as per the BSR value (default).
Words:	1
Cycles:	1(2) **Note:** 3 cycles if skip and followed by a 2-word instruction.

Q Cycle Activity:

Q1	Q2	Q3	Q4
Decode	Read register 'f'	Process Data	Write to destination

If skip:

Q1	Q2	Q3	Q4
No operation	No operation	No operation	No operation

If skip and followed by 2-word instruction:

Q1	Q2	Q3	Q4
No operation	No operation	No operation	No operation
No operation	No operation	No operation	No operation

Example:

```
HERE    INFSNZ  REG, 1, 0
ZERO
NZERO
```

Before Instruction
PC = Address (HERE)

After Instruction
REG = REG + 1
If REG ≠ 0;
PC = Address (NZERO)
If REG = 0;
PC = Address (ZERO)

IORLW — Inclusive OR literal with W

Syntax:	[*label*] IORLW k
Operands:	$0 \le k \le 255$
Operation:	(W) .OR. k → W
Status Affected:	N, Z
Encoding:	`0000` `1001` `kkkk` `kkkk`
Description:	The contents of W are OR'ed with the eight-bit literal 'k'. The result is placed in W.
Words:	1
Cycles:	1

Q Cycle Activity:

Q1	Q2	Q3	Q4
Decode	Read literal 'k'	Process Data	Write to W

Example: `IORLW 0x35`

Before Instruction
W = 0x9A

After Instruction
W = 0xBF

IORWF — Inclusive OR W with f

Syntax:	[*label*] IORWF f [,d [,a]
Operands:	$0 \le f \le 255$ $d \in [0,1]$ $a \in [0,1]$
Operation:	(W) .OR. (f) → dest
Status Affected:	N, Z
Encoding:	`0001` `00da` `ffff` `ffff`
Description:	Inclusive OR W with register 'f'. If 'd' is 0, the result is placed in W. If 'd' is 1, the result is placed back in register 'f' (default). If 'a' is 0, the Access Bank will be selected, over-riding the BSR value. If 'a' = 1, then the bank will be selected as per the BSR value (default).
Words:	1
Cycles:	1

Q Cycle Activity:

Q1	Q2	Q3	Q4
Decode	Read register 'f'	Process Data	Write to destination

Example: `IORWF RESULT, 0, 1`

Before Instruction
RESULT = 0x13
W = 0x91

After Instruction
RESULT = 0x13
W = 0x93

LFSR — Load FSR

Syntax:	[*label*] LFSR f,k
Operands:	$0 \le f \le 2$ $0 \le k \le 4095$
Operation:	k → FSRf
Status Affected:	None
Encoding:	1110 1111 | 1110 0000 | 00ff $k_7$kkk | k_{11}kkk kkkk
Description:	The 12-bit literal 'k' is loaded into the file select register pointed to by 'f'.
Words:	2
Cycles:	2

Q Cycle Activity:

Q1	Q2	Q3	Q4
Decode	Read literal 'k' MSB	Process Data	Write literal 'k' MSB to FSRfH
Decode	Read literal 'k' LSB	Process Data	Write literal 'k' to FSRfL

Example: `LFSR 2, 0x3AB`

After Instruction

FSR2H = 0x03
FSR2L = 0xAB

MOVF — Move f

Syntax:	[*label*] MOVF f [,d [,a]
Operands:	$0 \le f \le 255$ $d \in [0,1]$ $a \in [0,1]$
Operation:	f → dest
Status Affected:	N, Z
Encoding:	0101 | 00da | ffff | ffff
Description:	The contents of register 'f' are moved to a destination dependent upon the status of 'd'. If 'd' is 0, the result is placed in W. If 'd' is 1, the result is placed back in register 'f' (default). Location 'f' can be anywhere in the 256 byte bank. If 'a' is 0, the Access Bank will be selected, overriding the BSR value. If 'a' = 1, then the bank will be selected as per the BSR value (default).
Words:	1
Cycles:	1

Q Cycle Activity:

Q1	Q2	Q3	Q4
Decode	Read register 'f'	Process Data	Write W

Example: `MOVF REG, 0, 0`

Before Instruction

REG = 0x22
W = 0xFF

After Instruction

REG = 0x22
W = 0x22

MOVFF — Move f to f

Syntax: [*label*] MOVFF f_s,f_d

Operands: $0 \le f_s \le 4095$
$0 \le f_d \le 4095$

Operation: $(f_s) \rightarrow f_d$

Status Affected: None

Encoding:

1st word (source)	1100	ffff	ffff	$ffff_s$
2nd word (destin.)	1111	ffff	ffff	$ffff_d$

Description: The contents of source register 'f_s' are moved to destination register 'f_d'. Location of source 'f_s' can be anywhere in the 4096 byte data space (000h to FFFh), and location of destination 'f_d' can also be anywhere from 000h to FFFh.
Either source or destination can be W (a useful special situation).
`MOVFF` is particularly useful for transferring a data memory location to a peripheral register (such as the transmit buffer or an I/O port).

The `MOVFF` instruction cannot use the PCL, TOSU, TOSH or TOSL as the destination register.

Note: The `MOVFF` instruction should not be used to modify interrupt settings while any interrupt is enabled. See Section 8.0 for more information.

Words: 2

Cycles: 2 (3)

Q Cycle Activity:

Q1	Q2	Q3	Q4
Decode	Read register 'f' (src)	Process Data	No operation
Decode	No operation No dummy read	No operation	Write register 'f' (dest)

Example: `MOVFF REG1, REG2`

Before Instruction
REG1 = 0x33
REG2 = 0x11

After Instruction
REG1 = 0x33,
REG2 = 0x33

MOVLB — Move literal to low nibble in BS

Syntax: [*label*] MOVLB k

Operands: $0 \le k \le 255$

Operation: $k \rightarrow BSR$

Status Affected: None

Encoding:

0000	0001	kkkk	kkk

Description: The 8-bit literal 'k' is loaded into the Bank Select Register (BSR)

Words: 1

Cycles: 1

Q Cycle Activity:

Q1	Q2	Q3	Q4
Decode	Read literal 'k'	Process Data	Write literal 'k' t BSR

Example: `MOVLB 5`

Before Instruction
BSR register = 0x02

After Instruction
BSR register = 0x05

MOVLW — Move literal to W

Syntax:	[*label*] MOVLW k
Operands:	$0 \le k \le 255$
Operation:	$k \rightarrow W$
Status Affected:	None
Encoding:	`0000` `1110` `kkkk` `kkkk`
Description:	The eight-bit literal 'k' is loaded into W.
Words:	1
Cycles:	1

Q Cycle Activity:

Q1	Q2	Q3	Q4
Decode	Read literal 'k'	Process Data	Write to W

Example: `MOVLW 0x5A`

After Instruction

W = 0x5A

MOVWF — Move W to f

Syntax:	[*label*] MOVWF f [,a]
Operands:	$0 \le f \le 255$ $a \in [0,1]$
Operation:	$(W) \rightarrow f$
Status Affected:	None
Encoding:	`0110` `111a` `ffff` `ffff`
Description:	Move data from W to register 'f'. Location 'f' can be anywhere in the 256 byte bank. If 'a' is 0, the Access Bank will be selected, over-riding the BSR value. If 'a' = 1, then the bank will be selected as per the BSR value (default).
Words:	1
Cycles:	1

Q Cycle Activity:

Q1	Q2	Q3	Q4
Decode	Read register 'f'	Process Data	Write register 'f'

Example: `MOVWF REG, 0`

Before Instruction

W = 0x4F
REG = 0xFF

After Instruction

W = 0x4F
REG = 0x4F

MULLW — Multiply Literal with W

Syntax:	[*label*] MULLW k
Operands:	$0 \le k \le 255$
Operation:	(W) x k → PRODH:PRODL
Status Affected:	None
Encoding:	0000 | 1101 | kkkk | kkkk
Description:	An unsigned multiplication is carried out between the contents of W and the 8-bit literal 'k'. The 16-bit result is placed in PRODH:PRODL register pair. PRODH contains the high byte. W is unchanged. None of the status flags are affected. Note that neither overflow nor carry is possible in this operation. A zero result is possible but not detected.
Words:	1
Cycles:	1

Q Cycle Activity:

Q1	Q2	Q3	Q4
Decode	Read literal 'k'	Process Data	Write registers PRODH: PRODL

Example: `MULLW 0xC4`

Before Instruction

W = 0xE2
PRODH = ?
PRODL = ?

After Instruction

W = 0xE2
PRODH = 0xAD
PRODL = 0x08

MULWF — Multiply W with f

Syntax:	[*label*] MULWF f [,a]
Operands:	$0 \le f \le 255$ $a \in [0,1]$
Operation:	(W) x (f) → PRODH:PRODL
Status Affected:	None
Encoding:	0000 | 001a | ffff | ffff
Description:	An unsigned multiplication is carried out between the contents of W and the register file location 'f'. The 16-bit result is stored in the PRODH:PRODL register pair. PRODH contains the high byte. Both W and 'f' are unchanged. None of the status flags are affected. Note that neither overflow nor carry is possible in this operation. A zero result is possible but not detected. If 'a' is 0, the Access Bank will be selected, overriding the BSR value. If 'a' = 1, then the bank will be selected as per the BSR value (default).
Words:	1
Cycles:	1

Q Cycle Activity:

Q1	Q2	Q3	Q4
Decode	Read register 'f'	Process Data	Write registers PRODH: PRODL

Example: `MULWF REG, 1`

Before Instruction

W = 0xC4
REG = 0xB5
PRODH = ?
PRODL = ?

After Instruction

W = 0xC4
REG = 0xB5
PRODH = 0x8A
PRODL = 0x94

NEGF	**Negate f**
Syntax:	[*label*] NEGF f [,a]
Operands:	$0 \le f \le 255$ $a \in [0,1]$
Operation:	$(\overline{f}) + 1 \rightarrow f$
Status Affected:	N, OV, C, DC, Z
Encoding:	`0110` `110a` `ffff` `ffff`
Description:	Location 'f' is negated using two's complement. The result is placed in the data memory location 'f'. If 'a' is 0, the Access Bank will be selected, overriding the BSR value. If 'a' = 1, then the bank will be selected as per the BSR value.
Words:	1
Cycles:	1

Q Cycle Activity:

Q1	Q2	Q3	Q4
Decode	Read register 'f'	Process Data	Write register 'f'

Example: `NEGF REG, 1`

Before Instruction
REG = `0011 1010` [0x3A]
After Instruction
REG = `1100 0110` [0xC6]

NOP	**No Operation**
Syntax:	[*label*] NOP
Operands:	None
Operation:	No operation
Status Affected:	None
Encoding:	`0000` `1111` `0000` `xxxx` `0000` `xxxx` `0000` `xxxx`
Description:	No operation.
Words:	1
Cycles:	1

Q Cycle Activity:

Q1	Q2	Q3	Q4
Decode	No operation	No operation	No operation

Example:

None.

POP	**Pop Top of Return Stack**
Syntax:	[*label*] POP
Operands:	None
Operation:	(TOS) → bit bucket
Status Affected:	None
Encoding:	0000 0000 0000 0110
Description:	The TOS value is pulled off the return stack and is discarded. The TOS value then becomes the previous value that was pushed onto the return stack. This instruction is provided to enable the user to properly manage the return stack to incorporate a software stack.
Words:	1
Cycles:	1

Q Cycle Activity:

Q1	Q2	Q3	Q4
Decode	No operation	POP TOS value	No operation

Example: `POP`
`GOTO NEW`

Before Instruction
TOS = 0031A2h
Stack (1 level down) = 014332h

After Instruction
TOS = 014332h
PC = NEW

PUSH	**Push Top of Return Stack**
Syntax:	[*label*] PUSH
Operands:	None
Operation:	(PC+2) → TOS
Status Affected:	None
Encoding:	0000 0000 0000 01
Description:	The PC+2 is pushed onto the to the return stack. The previous T value is pushed down on the sta This instruction allows to implem a software stack by modifying T and then push it onto the return stack.
Words:	1
Cycles:	1

Q Cycle Activity:

Q1	Q2	Q3	Q4
Decode	PUSH PC+2 onto return stack	No operation	No operatic

Example: `PUSH`

Before Instruction
TOS = 00345Ah
PC = 000124h

After Instruction
PC = 000126h
TOS = 000126h
Stack (1 level down) = 00345Ah

RCALL — Relative Call

Syntax:	[*label*] RCALL n
Operands:	$-1024 \le n \le 1023$
Operation:	(PC) + 2 → TOS, (PC) + 2 + 2n → PC
Status Affected:	None
Encoding:	1101 | 1nnn | nnnn | nnnn
Description:	Subroutine call with a jump up to 1K from the current location. First, return address (PC+2) is pushed onto the stack. Then, add the 2's complement number '2n' to the PC. Since the PC will have incremented to fetch the next instruction, the new address will be PC+2+2n. This instruction is a two-cycle instruction.
Words:	1
Cycles:	2

Q Cycle Activity:

Q1	Q2	Q3	Q4
Decode	Read literal 'n' Push PC to stack	Process Data	Write to PC
No operation	No operation	No operation	No operation

Example: `HERE RCALL Jump`

Before Instruction
PC = Address (HERE)

After Instruction
PC = Address (Jump)
TOS = Address (HERE+2)

RESET — Reset

Syntax:	[*label*] RESET
Operands:	None
Operation:	Reset all registers and flags that are affected by a $\overline{\text{MCLR}}$ Reset.
Status Affected:	All
Encoding:	0000 | 0000 | 1111 | 1111
Description:	This instruction provides a way to execute a $\overline{\text{MCLR}}$ Reset in software.
Words:	1
Cycles:	1

Q Cycle Activity:

Q1	Q2	Q3	Q4
Decode	Start reset	No operation	No operation

Example: `RESET`

After Instruction
Registers = Reset Value
Flags* = Reset Value

RETFIE — Return from Interrupt

Syntax:	[*label*] RETFIE [s]
Operands:	s ∈ [0,1]
Operation:	(TOS) → PC, 1 → GIE/GIEH or PEIE/GIEL, if s = 1 (WS) → W, (STATUSS) → STATUS, (BSRS) → BSR, PCLATU, PCLATH are unchanged.
Status Affected:	GIE/GIEH, PEIE/GIEL.
Encoding:	0000 | 0000 | 0001 | 000s
Description:	Return from Interrupt. Stack is popped and Top-of-Stack (TOS) is loaded into the PC. Interrupts are enabled by setting either the high or low priority global interrupt enable bit. If 's' = 1, the contents of the shadow registers WS, STATUSS and BSRS are loaded into their corresponding registers, W, STATUS and BSR. If 's' = 0, no update of these registers occurs (default).
Words:	1
Cycles:	2

Q Cycle Activity:

Q1	Q2	Q3	Q4
Decode	No operation	No operation	pop PC from stack Set GIEH or GIEL
No operation	No operation	No operation	No operation

Example: `RETFIE 1`

After Interrupt

PC	=	TOS
W	=	WS
BSR	=	BSRS
STATUS	=	STATUSS
GIE/GIEH, PEIE/GIEL	=	1

RETLW — Return Literal to W

Syntax:	[*label*] RETLW k
Operands:	0 ≤ k ≤ 255
Operation:	k → W, (TOS) → PC, PCLATU, PCLATH are unchanged
Status Affected:	None
Encoding:	0000 | 1100 | kkkk | kkkk
Description:	W is loaded with the eight-bit literal 'k'. The program counter is loaded from the top of the stack (the return address). The high address latch (PCLATH) remains unchanged.
Words:	1
Cycles:	2

Q Cycle Activity:

Q1	Q2	Q3	Q4
Decode	Read literal 'k'	Process Data	pop PC from stack, Write to W
No operation	No operation	No operation	No operation

Example:

```
    CALL TABLE  ; W contains table
                ; offset value
                ; W now has
                ; table value
    :
TABLE
    ADDWF PCL   ; W = offset
    RETLW k0    ; Begin table
    RETLW k1    ;
    :
    :
    RETLW kn    ; End of table
```

Before Instruction

W = 0x07

After Instruction

W = value of kn

RETURN — Return from Subroutine

Syntax:	[*label*] RETURN [s]
Operands:	s ∈ [0,1]
Operation:	(TOS) → PC, if s = 1 (WS) → W, (STATUSS) → STATUS, (BSRS) → BSR, PCLATU, PCLATH are unchanged
Status Affected:	None
Encoding:	`0000` `0000` `0001` `001s`
Description:	Return from subroutine. The stack is popped and the top of the stack (TOS) is loaded into the program counter. If 's'= 1, the contents of the shadow registers WS, STATUSS and BSRS are loaded into their corresponding registers, W, STATUS and BSR. If 's' = 0, no update of these registers occurs (default).
Words:	1
Cycles:	2

Q Cycle Activity:

Q1	Q2	Q3	Q4
Decode	No operation	Process Data	pop PC from stack
No operation	No operation	No operation	No operation

Example: `RETURN`

After Interrupt
PC = TOS

RLCF — Rotate Left f through Carry

Syntax:	[*label*] RLCF f [,d [,a]
Operands:	0 ≤ f ≤ 255 d ∈ [0,1] a ∈ [0,1]
Operation:	(f<n>) → dest<n+1>, (f<7>) → C, (C) → dest<0>
Status Affected:	C, N, Z
Encoding:	`0011` `01da` `ffff` `ffff`
Description:	The contents of register 'f' are rotated one bit to the left through the Carry Flag. If 'd' is 0, the result is placed in W. If 'd' is 1, the result is stored back in register 'f' (default). If 'a' is 0, the Access Bank will be selected, overriding the BSR value. If 'a' = 1, then the bank will be selected as per the BSR value (default).

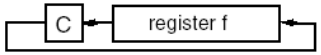

Words:	1
Cycles:	1

Q Cycle Activity:

Q1	Q2	Q3	Q4
Decode	Read register 'f'	Process Data	Write to destination

Example: `RLCF REG, 0, 0`

Before Instruction
```
REG  =  1110 0110
C    =  0
```
After Instruction
```
REG  =  1110 0110
W    =  1100 1100
C    =  1
```

RLNCF — Rotate Left f (no carry)

Syntax:	[*label*] RLNCF f [,d [,a]
Operands:	$0 \le f \le 255$ $d \in [0,1]$ $a \in [0,1]$
Operation:	(f<n>) → dest<n+1>, (f<7>) → dest<0>
Status Affected:	N, Z
Encoding:	`0100` `01da` `ffff` `ffff`
Description:	The contents of register 'f' are rotated one bit to the left. If 'd' is 0, the result is placed in W. If 'd' is 1, the result is stored back in register 'f' (default). If 'a' is 0, the Access Bank will be selected, overriding the BSR value. If 'a' is 1, then the bank will be selected as per the BSR value (default).

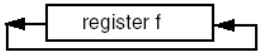

Words:	1
Cycles:	1

Q Cycle Activity:

Q1	Q2	Q3	Q4
Decode	Read register 'f'	Process Data	Write to destination

Example: `RLNCF REG, 1, 0`

Before Instruction
REG = `1010 1011`
After Instruction
REG = `0101 0111`

RRCF — Rotate Right f through Carry

Syntax:	[*label*] RRCF f [,d [,a]
Operands:	$0 \le f \le 255$ $d \in [0,1]$ $a \in [0,1]$
Operation:	(f<n>) → dest<n-1>, (f<0>) → C, (C) → dest<7>
Status Affected:	C, N, Z
Encoding:	`0011` `00da` `ffff` `ffff`
Description:	The contents of register 'f' are rotated one bit to the right through the Carry Flag. If 'd' is 0, the result is placed in W. If 'd' is 1, the result is placed back in register 'f' (default). If 'a' is 0, the Access Bank will be selected, overriding the BSR value. If 'a' is 1, then the bank will be selected as per the BSR value (default).

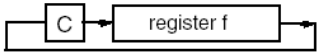

Words:	1
Cycles:	1

Q Cycle Activity:

Q1	Q2	Q3	Q4
Decode	Read register 'f'	Process Data	Write to destination

Example: `RRCF REG, 0, 0`

Before Instruction
REG = `1110 0110`
C = `0`
After Instruction
REG = `1110 0110`
W = `0111 0011`
C = `0`

RRNCF — Rotate Right f (no carry)

Syntax:	[*label*] RRNCF f [,d [,a]
Operands:	$0 \le f \le 255$ $d \in [0,1]$ $a \in [0,1]$
Operation:	(f<n>) → dest<n-1>, (f<0>) → dest<7>
Status Affected:	N, Z
Encoding:	`0100` `00da` `ffff` `ffff`
Description:	The contents of register 'f' are rotated one bit to the right. If 'd' is 0, the result is placed in W. If 'd' is 1, the result is placed back in register 'f' (default). If 'a' is 0, the Access Bank will be selected, overriding the BSR value. If 'a' is 1, then the bank will be selected as per the BSR value (default).

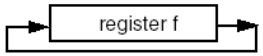

Words:	1
Cycles:	1

Q Cycle Activity:

Q1	Q2	Q3	Q4
Decode	Read register 'f'	Process Data	Write to destination

Example 1: `RRNCF REG, 1, 0`

Before Instruction
REG = 1101 0111
After Instruction
REG = 1110 1011

Example 2: `RRNCF REG, 0, 0`

Before Instruction
W = ?
REG = 1101 0111
After Instruction
W = 1110 1011
REG = 1101 0111

SETF — Set f

Syntax:	[*label*] SETF f [,a]
Operands:	$0 \le f \le 255$ $a \in [0,1]$
Operation:	FFh → f
Status Affected:	None
Encoding:	`0110` `100a` `ffff` `ffff`
Description:	The contents of the specified register are set to FFh. If 'a' is 0, the Access Bank will be selected, overriding the BSR value. If 'a' is 1, then the bank will be selected as per the BSR value (default).
Words:	1
Cycles:	1

Q Cycle Activity:

Q1	Q2	Q3	Q4
Decode	Read register 'f'	Process Data	Write register 'f'

Example: `SETF REG,1`

Before Instruction
REG = 0x5A
After Instruction
REG = 0xFF

SLEEP — Enter SLEEP mode

Syntax:	[*label*] SLEEP
Operands:	None
Operation:	00h → WDT, 0 → WDT postscaler, 1 → $\overline{TO}$, 0 → $\overline{PD}$
Status Affected:	$\overline{TO}$, $\overline{PD}$
Encoding:	0000 | 0000 | 0000 | 0011
Description:	The power-down status bit ($\overline{PD}$) is cleared. The time-out status bit ($\overline{TO}$) is set. Watchdog Timer and its postscaler are cleared. The processor is put into SLEEP mode with the oscillator stopped.
Words:	1
Cycles:	1

Q Cycle Activity:

Q1	Q2	Q3	Q4
Decode	No operation	Process Data	Go to sleep

Example: `SLEEP`

Before Instruction
$\overline{TO}$ = ?
$\overline{PD}$ = ?

After Instruction
$\overline{TO}$ = 1 †
$\overline{PD}$ = 0

† If WDT causes wake-up, this bit is cleared.

SUBFWB — Subtract f from W with borrow

Syntax:	[*label*] SUBFWB f [,d [,a]
Operands:	$0 \le f \le 255$ $d \in [0,1]$ $a \in [0,1]$
Operation:	(W) – (f) – ($\overline{C}$) → dest
Status Affected:	N, OV, C, DC, Z
Encoding:	0101 | 01da | ffff | ffff
Description:	Subtract register 'f' and carry flag (borrow) from W (2's complement method). If 'd' is 0, the result is stored in W. If 'd' is 1, the result is stored in register 'f' (default). If 'a' is 0, the Access Bank will be selected, overriding the BSR value. If 'a' is 1, then the bank will be selected as per the BSR value (default).
Words:	1
Cycles:	1

Q Cycle Activity:

Q1	Q2	Q3	Q4
Decode	Read register 'f'	Process Data	Write to destination

Example 1: `SUBFWB REG, 1, 0`

Before Instruction
REG = 3
W = 2
C = 1

After Instruction
REG = FF
W = 2
C = 0
Z = 0
N = 1 ; result is negative

Example 2: `SUBFWB REG, 0, 0`

Before Instruction
REG = 2
W = 5
C = 1

After Instruction
REG = 2
W = 3
C = 1
Z = 0
N = 0 ; result is positive

Example 3: `SUBFWB REG, 1, 0`

Before Instruction
REG = 1
W = 2
C = 0

After Instruction
REG = 0
W = 2
C = 1
Z = 1 ; result is zero
N = 0

SUBLW — Subtract W from literal

Syntax:	[*label*] SUBLW k
Operands:	$0 \le k \le 255$
Operation:	$k - (W) \rightarrow W$
Status Affected:	N, OV, C, DC, Z
Encoding:	`0000` `1000` `kkkk` `kkkk`
Description:	W is subtracted from the eight-bit literal 'k'. The result is placed in W.
Words:	1
Cycles:	1

Q Cycle Activity:

Q1	Q2	Q3	Q4
Decode	Read literal 'k'	Process Data	Write to W

Example 1: `SUBLW 0x02`

Before Instruction
W = 1
C = ?

After Instruction
W = 1
C = 1 ; result is positive
Z = 0
N = 0

Example 2: `SUBLW 0x02`

Before Instruction
W = 2
C = ?

After Instruction
W = 0
C = 1 ; result is zero
Z = 1
N = 0

Example 3: `SUBLW 0x02`

Before Instruction
W = 3
C = ?

After Instruction
W = FF ; (2's complement)
C = 0 ; result is negative
Z = 0
N = 1

SUBWF — Subtract W from f

Syntax:	[*label*] SUBWF f [,d [,a]
Operands:	$0 \le f \le 255$ $d \in [0,1]$ $a \in [0,1]$
Operation:	$(f) - (W) \rightarrow dest$
Status Affected:	N, OV, C, DC, Z
Encoding:	`0101` `11da` `ffff` `ffff`
Description:	Subtract W from register 'f' (2's complement method). If 'd' is 0, the result is stored in W. If 'd' is 1, the result is stored back in register 'f' (default). If 'a' is 0, the Access Bank will be selected, overriding the BSR value. If 'a' is 1, then the bank will be selected as per the BSR value (default).
Words:	1
Cycles:	1

Q Cycle Activity:

Q1	Q2	Q3	Q4
Decode	Read register 'f'	Process Data	Write to destination

Example 1: `SUBWF REG, 1, 0`

Before Instruction
REG = 3
W = 2
C = ?

After Instruction
REG = 1
W = 2
C = 1 ; result is positive
Z = 0
N = 0

Example 2: `SUBWF REG, 0, 0`

Before Instruction
REG = 2
W = 2
C = ?

After Instruction
REG = 2
W = 0
C = 1 ; result is zero
Z = 1
N = 0

Example 3: `SUBWF REG, 1, 0`

Before Instruction
REG = 1
W = 2
C = ?

After Instruction
REG = FFh ;(2's complement)
W = 2
C = 0 ; result is negative
Z = 0
N = 1

SUBWFB — Subtract W from f with Borrow

Syntax:	[*label*] SUBWFB f [,d [,a]
Operands:	$0 \le f \le 255$ $d \in [0,1]$ $a \in [0,1]$
Operation:	(f) – (W) – ($\overline{C}$) → dest
Status Affected:	N, OV, C, DC, Z
Encoding:	`0101` `10da` `ffff` `ffff`
Description:	Subtract W and the carry flag (borrow) from register 'f' (2's complement method). If 'd' is 0, the result is stored in W. If 'd' is 1, the result is stored back in register 'f' (default). If 'a' is 0, the Access Bank will be selected, overriding the BSR value. If 'a' is 1, then the bank will be selected as per the BSR value (default).
Words:	1
Cycles:	1

Q Cycle Activity:

Q1	Q2	Q3	Q4
Decode	Read register 'f'	Process Data	Write to destination

Example 1: `SUBWFB REG, 1, 0`

```
Before Instruction
    REG  =  0x19    (0001 1001)
    W    =  0x0D    (0000 1101)
    C    =  1
After Instruction
    REG  =  0x0C    (0000 1011)
    W    =  0x0D    (0000 1101)
    C    =  1
    Z    =  0
    N    =  0       ; result is positive
```

Example 2: `SUBWFB REG, 0, 0`

```
Before Instruction
    REG  =  0x1B    (0001 1011)
    W    =  0x1A    (0001 1010)
    C    =  0
After Instruction
    REG  =  0x1B    (0001 1011)
    W    =  0x00
    C    =  1
    Z    =  1       ; result is zero
    N    =  0
```

Example 3: `SUBWFB REG, 1, 0`

```
Before Instruction
    REG  =  0x03    (0000 0011)
    W    =  0x0E    (0000 1101)
    C    =  1
After Instruction
    REG  =  0xF5    (1111 0100)
                    ; [2's comp]
    W    =  0x0E    (0000 1101)
    C    =  0
    Z    =  0
    N    =  1       ; result is negative
```

SWAPF — Swap f

Syntax:	[*label*] SWAPF f [,d [,a]
Operands:	$0 \le f \le 255$ $d \in [0,1]$ $a \in [0,1]$
Operation:	(f<3:0>) → dest<7:4>, (f<7:4>) → dest<3:0>
Status Affected:	None
Encoding:	`0011` `10da` `ffff` `ffff`
Description:	The upper and lower nibbles of register 'f' are exchanged. If 'd' is 0, the result is placed in W. If 'd' is 1, the result is placed in register 'f' (default). If 'a' is 0, the Access Bank will be selected, overriding the BSR value. If 'a' is 1, then the bank will be selected as per the BSR value (default).
Words:	1
Cycles:	1

Q Cycle Activity:

Q1	Q2	Q3	Q4
Decode	Read register 'f'	Process Data	Write to destination

Example: `SWAPF REG, 1, 0`

```
Before Instruction
    REG  =  0x53
After Instruction
    REG  =  0x35
```

TBLRD — Table Read

Syntax: [*label*] TBLRD (*; *+; *-; +*)

Operands: None

Operation:
if TBLRD *,
(Prog Mem (TBLPTR)) → TABLAT;
TBLPTR - No Change;
if TBLRD *+,
(Prog Mem (TBLPTR)) → TABLAT;
(TBLPTR) +1 → TBLPTR;
if TBLRD *-,
(Prog Mem (TBLPTR)) → TABLAT;
(TBLPTR) -1 → TBLPTR;
if TBLRD +*,
(TBLPTR) +1 → TBLPTR;
(Prog Mem (TBLPTR)) → TABLAT;

Status Affected: None

Encoding:

0000	0000	0000	10nn nn=0 * =1 *+ =2 *- =3 +*

Description: This instruction is used to read the contents of Program Memory (P.M.). To address the program memory, a pointer called Table Pointer (TBLPTR) is used. The TBLPTR (a 21-bit pointer) points to each byte in the program memory. TBLPTR has a 2 Mbyte address range.

TBLPTR[0] = 0: Least Significant Byte of Program Memory Word

TBLPTR[0] = 1: Most Significant Byte of Program Memory Word

The `TBLRD` instruction can modify the value of TBLPTR as follows:

- no change
- post-increment
- post-decrement
- pre-increment

Words: 1

Cycles: 2

Q Cycle Activity:

Q1	Q2	Q3	Q4
Decode	No operation	No operation	No operation
No operation	No operation (Read Program Memory)	No operation	No operation (Write TABLAT)

TBLRD — Table Read (cont'd)

Example1: `TBLRD *+ ;`

Before Instruction

TABLAT	=	0x55
TBLPTR	=	0x00A356
MEMORY(0x00A356)	=	0x34

After Instruction

TABLAT	=	0x34
TBLPTR	=	0x00A357

Example2: `TBLRD +* ;`

Before Instruction

TABLAT	=	0xAA
TBLPTR	=	0x01A357
MEMORY(0x01A357)	=	0x12
MEMORY(0x01A358)	=	0x34

After Instruction

TABLAT	=	0x34
TBLPTR	=	0x01A358

TBLWT — Table Write

Syntax: [*label*] TBLWT (*; *+; *-; +*)

Operands: None

Operation:
if TBLWT*,
(TABLAT) → Holding Register;
TBLPTR - No Change;
if TBLWT*+,
(TABLAT) → Holding Register;
(TBLPTR) +1 → TBLPTR;
if TBLWT*-,
(TABLAT) → Holding Register;
(TBLPTR) -1 → TBLPTR;
if TBLWT+*,
(TBLPTR) +1 → TBLPTR;
(TABLAT) → Holding Register;

Status Affected: None

Encoding:

0000	0000	0000	11nn nn=0 * =1 *+ =2 *- =3 +*

Description: This instruction uses the 3 LSbs of the TBLPTR to determine which of the 8 holding registers the TABLAT data is written to. The 8 holding registers are used to program the contents of Program Memory (P.M.). See Section 5.0 for information on writing to FLASH memory.
The TBLPTR (a 21-bit pointer) points to each byte in the program memory. TBLPTR has a 2 MBtye address range. The LSb of the TBLPTR selects which byte of the program memory location to access.

TBLPTR[0] = 0: Least Significant Byte of Program Memory Word

TBLPTR[0] = 1: Most Significant Byte of Program Memory Word

The `TBLWT` instruction can modify the value of TBLPTR as follows:

- no change
- post-increment
- post-decrement
- pre-increment

Words: 1

Cycles: 2

Q Cycle Activity:

Q1	Q2	Q3	Q4
Decode	No operation	No operation	No operation
No operation	No operation (Read TABLAT)	No operation	No operation (Write to Holding Register or Memory)

TBLWT — Table Write (Continued)

Example1: `TBLWT *+;`

Before Instruction

TABLAT = 0x55
TBLPTR = 0x00A356
HOLDING REGISTER (0x00A356) = 0xFF

After Instructions (table write completion)

TABLAT = 0x55
TBLPTR = 0x00A357
HOLDING REGISTER (0x00A356) = 0x55

Example 2: `TBLWT +*;`

Before Instruction

TABLAT = 0x34
TBLPTR = 0x01389A
HOLDING REGISTER (0x01389A) = 0xFF
HOLDING REGISTER (0x01389B) = 0xFF

After Instruction (table write completion)

TABLAT = 0x34
TBLPTR = 0x01389B
HOLDING REGISTER (0x01389A) = 0xFF
HOLDING REGISTER (0x01389B) = 0x34

TSTFSZ — Test f, skip if 0

Syntax:	[*label*] TSTFSZ f [,a]
Operands:	$0 \le f \le 255$ $a \in [0,1]$
Operation:	skip if f = 0
Status Affected:	None
Encoding:	0110 | 011a | ffff | ffff
Description:	If 'f' = 0, the next instruction, fetched during the current instruction execution, is discarded and a NOP is executed, making this a two-cycle instruction. If 'a' is 0, the Access Bank will be selected, overriding the BSR value. If 'a' is 1, then the bank will be selected as per the BSR value (default).
Words:	1
Cycles:	1(2) **Note:** 3 cycles if skip and followed by a 2-word instruction.

Q Cycle Activity:

Q1	Q2	Q3	Q4
Decode	Read register 'f'	Process Data	No operation

If skip:

Q1	Q2	Q3	Q4
No operation	No operation	No operation	No operation

If skip and followed by 2-word instruction:

Q1	Q2	Q3	Q4
No operation	No operation	No operation	No operation
No operation	No operation	No operation	No operation

Example:

```
HERE    TSTFSZ  CNT, 1
NZERO     :
ZERO    :
```

Before Instruction
PC = Address (HERE)
After Instruction
If CNT = 0x00,
PC = Address (ZERO)
If CNT ≠ 0x00,
PC = Address (NZERO)

XORLW — Exclusive OR literal with W

Syntax:	[*label*] XORLW k
Operands:	$0 \le k \le 255$
Operation:	(W) .XOR. k → W
Status Affected:	N, Z
Encoding:	0000 | 1010 | kkkk | kkkk
Description:	The contents of W are XORed with the 8-bit literal 'k'. The result is placed in W.
Words:	1
Cycles:	1

Q Cycle Activity:

Q1	Q2	Q3	Q4
Decode	Read literal 'k'	Process Data	Write to W

Example: `XORLW 0xAF`

Before Instruction
W = 0xB5
After Instruction
W = 0x1A

XORWF	**Exclusive OR W with f**
Syntax:	[*label*] XORWF f [,d [,a]
Operands:	$0 \le f \le 255$ $d \in [0,1]$ $a \in [0,1]$
Operation:	(W) .XOR. (f) → dest
Status Affected:	N, Z
Encoding:	`0001` `10da` `ffff` `ffff`
Description:	Exclusive OR the contents of W with register 'f'. If 'd' is 0, the result is stored in W. If 'd' is 1, the result is stored back in the register 'f' (default). If 'a' is 0, the Access Bank will be selected, overriding the BSR value. If 'a' is 1, then the bank will be selected as per the BSR value (default).
Words:	1
Cycles:	1

Q Cycle Activity:

Q1	Q2	Q3	Q4
Decode	Read register 'f'	Process Data	Write to destination

Example: `XORWF REG, 1, 0`

Before Instruction
REG = 0xAF
W = 0xB5

After Instruction
REG = 0x1A
W = 0xB5